Space Saving Vacuum Ejector/Vacuum Pump System

ZQ Series

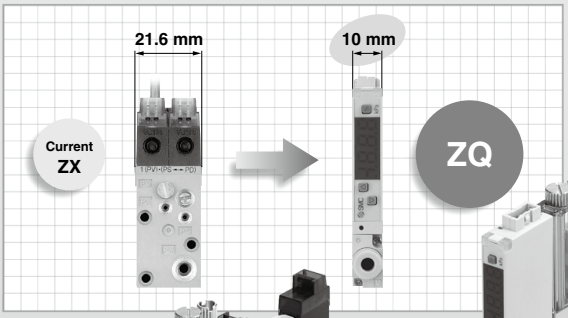

Width 10 mm
Weight 109 g

Single unit with vacuum pressure switch and suction filter

[Option]

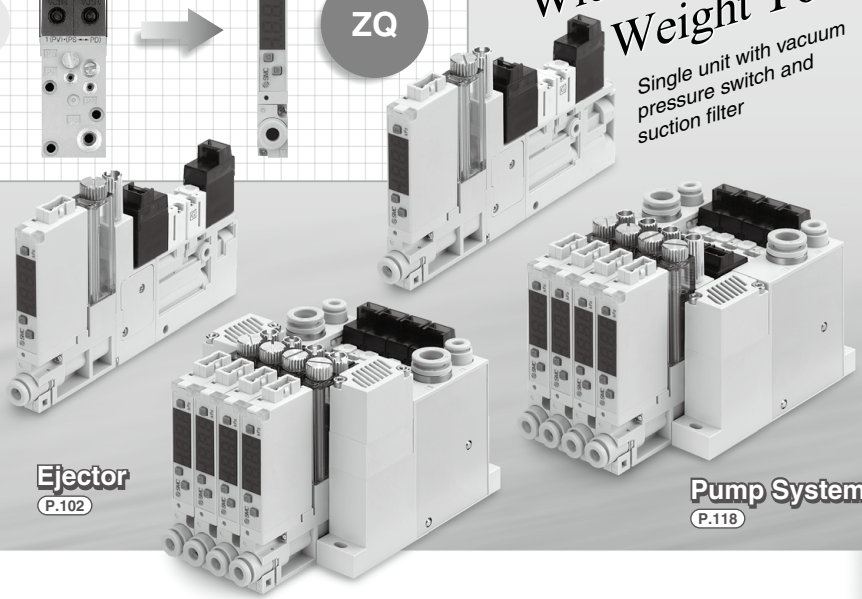

Ejector
P.102

Pump System
P.118

Easy-to-use vacuum pressure switch

- **Push button type provides easy operation.**

■ **Vacuum pressure switch with LED display**

- **NPN open collector 1 output + analog voltage**
- **PNP open collector 1 output + analog voltage**
- **NPN open collector 2 outputs**
- **PNP open collector 2 outputs**

■ **With One-touch fittings**

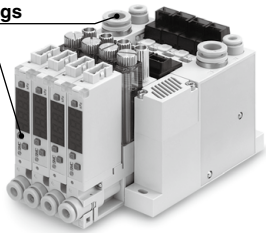

Can **copy** to up to **10** switches simultaneously.

The settings of the master pressure switch (source of copy) can be copied to the slave pressure switches.

- **Reduction in setting work**
- **Prevention of mistakes in setting**

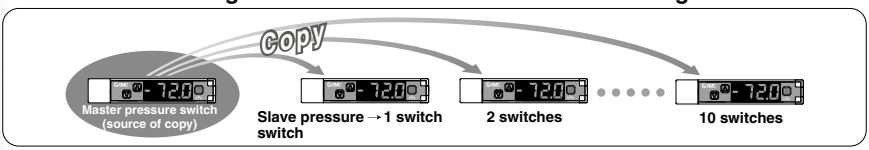

Space Saving Vacuum Ejector

ZQ Series

[Option]
Note) CE-compliant:
For DC only.

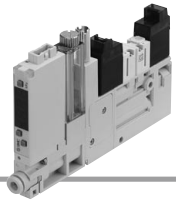

How to Order

Ejector Unit

Made to Order — For "Made to Order", refer to pages 115 and 116.

ZQ1 [05] [1U] – [K1] [ ] [5] [L] [ ] – [EA] [ ] [G] [ ] – [3] [3] – [ ] – [ ]

① ② ③ ④ ⑤ ⑥ ⑦ ⑧ ⑨ ⑩ ⑪ ⑫ ⑬ ⑭ ⑮

① Nozzle nominal size

05	ø0.5
07	ø0.7
10	ø1.0

② Exhaust type

1U	With silencer for single unit
3M	With silencer for manifold

③ Solenoid valve combination (Refer to Table (1).)

Symbol	Supply valve	Vacuum release valve
K1	Normally closed	Normally closed
K2 Note 1)	Normally open	Normally closed
J1	Normally closed	None
J2 Note 1)	Normally open	None
Q1	Latching positive common	Normally closed
Q2	Latching positive common	None
N1	Latching negative common	Normally closed
N2	Latching negative common	None

Note 1) When using K2 or J2 (supply valve normally open), ensure that the energizing time does not become longer than the non-energizing time. If the energizing time becomes longer or if the valve is energized for 10 minutes or longer, select the DC low wattage type in "Made to Order". (Refer to page 116.)

④ Pilot valve (Refer to Table (1).)

Nil	Standard (DC: 1 W) Note 2)
Y	DC low wattage type (0.5 W) Note 2)

Note 2) Avoid energizing the solenoid valve for long periods of time. (Refer to Design and Selection on Specific Product Precautions.)

⑤ Solenoid valve rated voltage (Refer to Table (1).)

		CE-compliant
1 Note 3)	100 VAC (50/60 Hz)	—
2 Note 3)	200 VAC (50/60 Hz)	—
3 Note 3)	110 VAC (50/60 Hz)	—
4 Note 3)	220 VAC (50/60 Hz)	—
5	24 VDC	●
6	12 VDC	●

Note 3) CE-compliant products are not available for "1", "2", "3" and "4".

Table (1) Combination of Solenoid Valve, Pilot Valve and Power Supply Voltage

Combination no.	Solenoid valve combination symbol	Pilot valve symbol	Applicable power supply voltage (V)					
			100 AC	200 AC	110 AC	220 AC	24 DC	12 DC
①	K1	Nil	—	—	—	—	●	●
②	K1	Y	—	—	—	—	●	●
③	K2	Nil	—	—	—	—	●	●
④	J1	Nil	●	●	●	●	●	●
⑤	J1	Y	—	—	—	—	●	●
⑥	J2	Nil	—	—	—	—	●	●
⑦	Q1	Nil	—	—	—	—	●	●
⑧	Q2	Nil	●	●	●	●	●	●
⑨	N1	Nil	—	—	—	—	●	●
⑩	N2	Nil	—	—	—	—	●	●

∗ Combinations ① to ⑩ in the above table are the only possible options.

⑥ Electrical entry

L	L-type plug connector, with 0.3 m lead wire, with light/surge voltage suppressor	
LO	L-type plug connector, without connector, with light/surge voltage suppressor	
G	Grommet, with 0.3 m lead wire (Latching/AC type: Not applicable)	

⑦ Manual override Note 4)

Nil	Non-locking push type Latching type: Push-locking type
B	Locking type (Q1/Q2/N1/N2: Not applicable)

Note 4) Latching type supply valve: Available in "Nil" only.
In this case, the supply valve and release valve come with a push-locking type.

⑧ Vacuum pressure switch suction filter Note 5)

EA	0 to –101 kPa/NPN open collector 2 outputs, with suction filter
EB	0 to –101 kPa/PNP open collector 2 outputs, with suction filter
EC	0 to –101 kPa/NPN open collector 1 output + analog voltage, with suction filter
EE	0 to –101 kPa/PNP open collector 1 output + analog voltage, with suction filter
FA	100 to –100 kPa/NPN open collector 2 outputs, with suction filter
FB	100 to –100 kPa/PNP open collector 2 outputs, with suction filter
FC	100 to –100 kPa/NPN open collector 1 output + analog voltage, with suction filter
FE	100 to –100 kPa/PNP open collector 1 output + analog voltage, with suction filter
F	Suction filter only

Note 5) The filter included in this product is of an simple type, and will become clogged quickly in environments with high quantities of dust or particulates. Please make additional use of an air suction filter of the ZFA, ZFB or ZFC series.

⚠Warning

The filter case of this suction filter is made of nylon. Contact with alcohol or similar chemicals may cause it to be damaged. Also, do not use the filter when these chemicals are present in the atmosphere.

⑨ Vacuum pressure switch unit specifications

Nil	With unit switching function Note 6)
M	Fixed SI unit Note 7)
P	With unit switching function Note 6) (Initial value psi)

Note 6) Under the New Measurement Law, sales of switches with the unit switching function are not allowed for use in Japan.
Note 7) Fixed unit: kPa

⑩ Vacuum pressure switch lead wire specifications

Nil	Without connector
G	Lead wire with connector (Lead wire length 2 m) With connector cover

⑪ Check valve Note 8) Note 9)

Nil	None
K	With check valve

Note 8) The check valve has a function to prevent the exhaust air from the silencer overflowing to the vacuum port side when a manifold is used, but it cannot prevent overflow of the exhaust air completely. During usage, please inspect thoroughly with actual machine.
Also, in order to completely prevent the overflow of exhaust air, leave plenty of space between the check valve unit and adjacent ejector to avoid interference from the ejector's exhaust unit.
Note 9) Only applicable to the exhaust type 3M and cannot be selected for solenoid valve combinations of J1, J2, Q2 and N2.

⚠Warning

① Cannot be used for vacuum retention.
② Use a release valve. (Without a release valve, a workpiece may not be released.)

⑫ Fitting (V port) Note 10)

Symbol	Applicable tubing O.D.
0	Without fitting (M5 x 0.8)
1	ø3.2 (Straight)
2	ø4 (Straight)
3	ø6 (Straight)
4	ø3.2 (Elbow)
5	ø4 (Elbow)

⑬ Fitting (P port) Note 10)

Symbol	Applicable tubing O.D.	Object spec.
Nil	Without port	Manifold
0	Without fitting (M5 x 0.8)	Single unit
2	ø4 (Straight)	
3	ø6 (Straight)	
5	ø4 (Elbow)	

⑭ Bracket A

Nil	With bracket A
N	Without bracket A

Note 11)

⑮ CE-compliant

Nil	—
Q	CE-compliant

Note) CE-compliant: For DC only.

Note 10) For filter only (Without vacuum pressure switch)
Single unit: When neither V port fitting nor P port fitting are needed, enter nothing or –00 in the dotted line "How to Order".
Manifold specifications: When the V port fitting is not needed, enter nothing or –0 in the dotted line "How to Order".
Note 11) Only applicable to the exhaust type 1U.

How to Order

Manifold **ZZQ1 07 – B S C**

Number of stations Note)

01	1 station
02	2 stations
⋮	⋮
08	8 stations

Note) Number of stations varies according to nozzle nominal size during simultaneous operation.

Air pressure supply (P) port position

B	Both sides

Exhaust

S	With silencers (Both sides)

Vacuum release pressure supply port (PD port)

B	None (Release pressure is supplied from the P port.)
C	Provided (Air can be alternatively supplied from the P port.)

Maximum Number of Stations in Simultaneous Operation

Nozzle nominal size	Maximum number of stations in simultaneous operation
ø0.5	8 stations
ø0.7	6 stations
ø1.0	4 stations

Manifold Ordering Example

ZZQ108-BSB → 1 pc.
***ZQ1053M-K1Y5L-EAG (-Q) → 4 pcs. (Stations 1 to 4)**
***ZQ1103M-K1Y5L-EAG (-Q) → 4 pcs. (Stations 5 to 8)**

Note) By viewing the front side of vacuum port (V), stations are counted starting from station 1 on the left side.

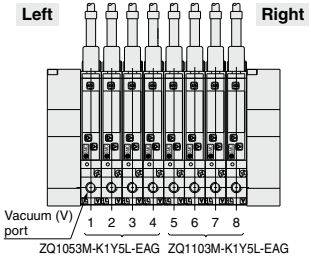

Flow/Exhaust Characteristics

ZQ105 / Exhaust Characteristics

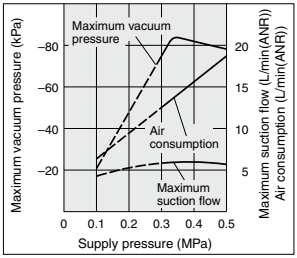

ZQ105 / Flow Rate Characteristics

Supply pressure 0.35 MPa

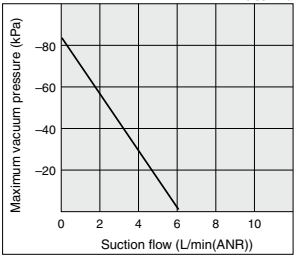

ZQ107 / Exhaust Characteristics

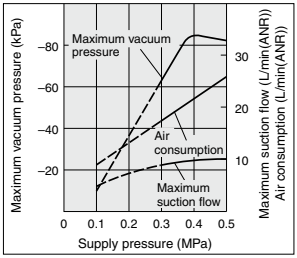

ZQ107 / Flow Rate Characteristics

Supply pressure 0.43 MPa

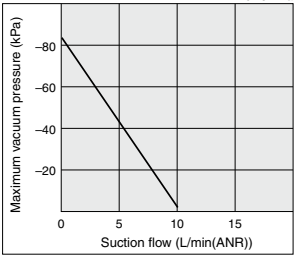

ZQ110 / Exhaust Characteristics

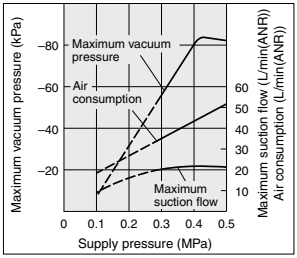

ZQ110 / Flow Rate Characteristics

Supply pressure 0.43 MPa

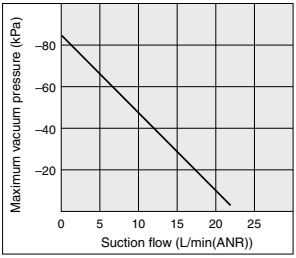

How to Read Flow Rate Characteristics

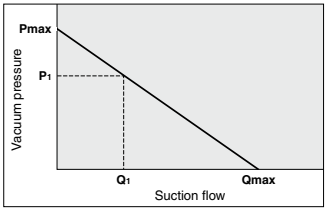

Flow rate characteristics are expressed in ejector vacuum pressure and suction flow. If suction flow rate changes, a change in vacuum pressure will also be expressed. Normally this relationship is expressed in ejector standard use.

In the graph, **Pmax** is max. vacuum pressure and **Qmax** is max. suction flow. The valves are specified according to catalog use. Changes in vacuum pressure are expressed in the below order.

1. When ejector suction port is covered and made airtight, suction flow becomes 0 and vacuum pressure is at maximum value (**Pmax**).
2. When suction port is opened gradually, air can flow through, (air leakage), suction flow increases, but vacuum pressure decreases. (condition **P_1** and **Q_1**)
3. When suction port is opened further, suction flow moves to maximum value (**Qmax**), but vacuum pressure is near 0. (atmospheric pressure).

When vacuum port (vacuum piping) has no leakage, vacuum pressure becomes maximum, and vacuum pressure decreases as leakage increases. When leakage value is the same as max. suction flow, vacuum pressure is near 0.

When ventirative or leaky work must be adsorbed, please note that vacuum pressure will not be high.

⚠ Precautions

Be sure to read this before handling the products. Refer to back page 50 for Safety Instructions and pages 49 to 51 for Vacuum Equipment Precautions.

⚠Caution

Refer to the vacuum equipment model selection on pages 25 to 48 for the selecting and sizing of ZQ series.

Specifications

Ejector

Model		ZQ105	ZQ107	ZQ110
Nozzle nominal diameter (mm)		0.5	0.7	1.0
Maximum suction flow (L/min (ANR))		5	10	22
Air consumption (L/min (ANR))		14	23	46
Maximum vacuum pressure		–80 kPa		
Supply pressure range	**Air pressure supply port (P)**	0.3 to 0.5 MPa (Normally open: 0.3 to 0.45 MPa)		
	Supply pressure port for vacuum release (PD)	0.3 to 0.5 MPa (Normally open: 0.3 to 0.45 MPa), and also PD pressure ≤P pressure		
Supply pressure Note)		0.35 MPa	0.43 MPa	
Operating temperature range		5 to 50°C		
Fluid		Air		

Note) Maximum suction flow can be obtained by standard supply pressure.

Weight

Single unit	With suction filter Note 1)	95 g
	With vacuum pressure switch and suction filter Note 2)	109 g
End plate assembly for manifold		122 g

Note 1) Including a 0.3 m connector for supply valve and vacuum release valve.
Note 2) Including a 0.3 m connector for supply valve and vacuum release valve and a 2 m connector for vacuum pressure switch.

◎ **Calculation of weight for the manifold type**
(Single unit weight) x (Number of stations) + (Weight of end plate assembly for manifold)

Example) Vacuum pressure switch + 8 stations with suction filter
109 g x 8 + 122 g = 994 g

Supply Valve / Vacuum Release Valve

Type		Normally closed		Latching type	Normally open
		Standard (1 W)	Low wattage type (0.5 W)		
Model (Refer to "How to Order" for solenoid valves on page 107.)		**VQ110-□**	**VQ110Y-□**	**VQ110$^{L}_{N}$-□**	**ZQ1-VQ120-□**
Manual override		Non-locking push type / Locking type (Tool type)		Push-locking type	Non-locking push type / Locking type (Tool type)
Rated coil voltage		12, 24 VDC, 100, 110, 200, 220 VAC	12, 24 VDC	12, 24 VDC, 100, 110, 200, 220 VAC	12, 24 VDC
Power consumption (current value)	**DC**	1 W	0.5 W	1 W	
	100 VAC	0.5 VA (5 mA)	—	0.6 VA (6 mA)	—
	110 VAC	0.55 VA (5 mA)	—	0.65 VA (5.9 mA)	—
	200 VAC	1.0 VA (5 mA)	—	1.2 VA (6 mA)	—
	220 VAC	1.1 VA (5 mA)	—	1.3 VA (5.9 mA)	—
Electrical entry		Grommet L-type plug connector (with light/surge voltage suppressor)		L-type plug connector (with light/surge voltage suppressor)	Grommet L-type plug connector (with light/surge voltage suppressor)

Specifications

Vacuum Pressure Switch

Model			ZQ1-ZSE (ZSE10)	ZQ1-ZSF (ZSE10F)
Rated pressure range			0 to –101 kPa	–100 to 100 kPa
Set pressure range/Display pressure range			10 to –105 kPa	–105 to 105 kPa
Withstand pressure			500 kPa	
Minimum setting unit			0.1 kPa	
Power supply voltage			12 to 24 VDC ±10%, Ripple (p-p) 10% or less (with power supply polarity protection)	
Current consumption			40 mA or less	
Switch output			NPN or PNP open collector: 2 outputs (selectable)	
	Maximum load current		80 mA	
	Maximum applied voltage		28 V (with NPN output)	
	Residual voltage		2 V or less (with load current of 80 mA)	
	Response time		2.5 ms or less (Response time selections with anti-chattering function: 20, 100, 500, 1000 and 2000 ms)	
	Short circuit protection		With short-circuit protection	
Repeatability			±0.2% F.S. ±1 digit	
Hysteresis	Hysteresis mode		Variable (0 or above) Note 1)	
	Window comparator mode			
Analog output	Voltage output	Output voltage (rated pressure range)	1 to 5 V ±2.5% F.S.	
		Linearity	±1% F.S. or less	
		Output impedance	Approx. 1 kΩ	
Display system			3 1/2-digit, 7 segment LED 1-color display (Red)	
Display accuracy			±2% F.S. ±1 digit (at ambient temperature of 25 ±3°C)	
Operation indicator light			Lights when ON, OUT1: Green, OUT2: Red	
Environ-mental resistance	Enclosure		IP40	
	Ambient humidity range		Operating/Stored: 35 to 85% RH (with no condensation)	
	Withstand voltage		1000 VAC for 1 min. between terminals and housing	
	Insulation resistance		50 MΩ or more (500 VDC measured via megohmmeter) between terminals and housing	
	Vibration resistance		10 to 150 Hz at the smaller of amplitude 1.5 mm or acceleration 20 m/s^2 in X, Y, Z directions for 2 hrs. each (De-energized)	
	Impact resistance		100 m/s^2 in X, Y, Z directions 3 times each (De-energized)	
Temperature characteristics			±2% F.S. (at 25°C of ambient temperature range between –5 and 50°C)	
Lead wires			Oil-resistant cabtire cord Cross section: 0.15 mm^2 (AWG26), 5 cores, 2 m, Conductor O.D.: 1.0 mm	

Note 1) If the applied voltage fluctuates around the set-value, the hysteresis must be set to a value more than the fluctuating width, otherwise chattering will occur.
Note 2) For others, refer to ejector specifications on page 105.

Construction

Single unit

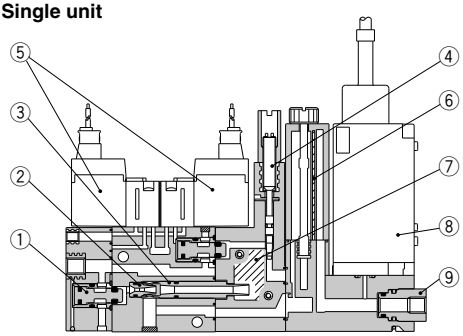

Manifold

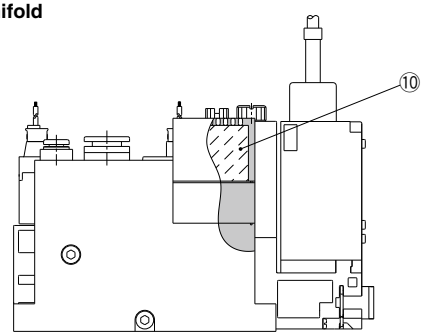

Component Parts

No.	Description	Material
1	Poppet valve assembly	—
2	Nozzle	Resin
3	Diffuser	Resin
4	Vacuum release flow adjustment needle	Stainless steel

Replacement Parts

No.	Description	Material	Part no.
5	Solenoid valve	—	Refer to page 107.
6	Filter element	PVA sponge	XT534-5-001-AS
7	Sound absorbing material 1 (single unit)	PVA sponge	ZQ-SAE
8	Vacuum pressure switch	—	Refer to page 107.
9	Fitting	—	—
10	Sound absorbing material 2 (manifold)	PVA sponge	ZZQ-SAE

How to Order

Solenoid Valve

VQ1 1 0 □ – 5 L □

ZQ1-VQ1 2 0 □ – 5 L □

Actuation

1	Normally closed

Actuation

2	Normally open

Pilot valve

Nil	Standard (1 W)

Pilot valve

Nil	Standard (DC: 1 W)
Y	Low wattage type (0.5 W) * AC type: Not applicable
L	Latching positive common
N	Latching negative common

Solenoid valve rated voltage

5	24 VDC
6	12 VDC

Solenoid valve rated voltage

1	100 VAC (50/60 Hz)
2	200 VAC (50/60 Hz)
3	110 VAC (50/60 Hz)
4	220 VAC (50/60 Hz)
5	24 VDC
6	12 VDC

Manual override Note)

Nil	Non-locking push type Latching type: Push-locking type
B	Locking type

Note) Latching type: Available in "Nil" only

Electrical entry Note)

L	L-type plug connector, with 0.3 m lead wire	
LO	L-type plug connector, without connector	
G	Grommet, with 0.3 m lead wire (Latching/AC type: Not applicable)	

Note) Mounting screws are attached.

Connector assembly part no.

● **How to order connector assembly**

- **Single**
  AXT661-14A-□

DC positive common

- **Latching**
  AXT661-13A-□

DC negative common

- **Latching**
  AXT661-13AN-□

100 VAC

- **Single**
  AXT661-31A-□
- **Latching**
  AXT661-32A-□

200 VAC

- **Single**
  AXT661-34A-□
- **Latching**
  AXT661-35A-□

Lead wire length

Nil	300 mm
6	600 mm
10	1000 mm
20	2000 mm
30	3000 mm

Connector, socket (3 pcs) only
AXT661-12A

● **Lead wire length of the plug connector**

The lead wire length for a valve with a lead wire is 300 mm. When in need of a valve with a lead wire longer than 600 mm, place an order for a valve without a connector and connector assembly.

Vacuum Pressure Switch

ZQ1-ZS □ □ □ □ – □ – A

Vacuum pressure switch specifications

EA	0 to –101 kPa/NPN open collector 2 outputs, with suction filter
EB	0 to –101 kPa/PNP open collector 2 outputs, with suction filter
EC	0 to –101 kPa/NPN open collector 1 output + analog voltage, with suction filter
EE	0 to –101 kPa/PNP open collector 1 output + analog voltage, with suction filter
FA	100 to –100 kPa/NPN open collector 2 outputs, with suction filter
FB	100 to –100 kPa/PNP open collector 2 outputs, with suction filter
FC	100 to –100 kPa/NPN open collector 1 output + analog voltage, with suction filter
FE	100 to –100 kPa/PNP open collector 1 output + analog voltage , with suction filter

Vacuum pressure switch unit specifications

Nil	With unit switching function Note 1)
M	Fixed SI unit Note 2)
P	With unit switching function Note 1) (Initial value psi)

Note 1) Under the New Measurement Law, sales of switches with the unit switching function are not allowed for use in Japan.
Note 2) Fixed unit: kPa

Vacuum pressure switch lead wire specifications

Nil	Without connector
G	Lead wire with connector (lead wire length 2 m) With connector cover

Check valve Note 3)

Nil	None
K	With check valve

Note 3) The check valve has a function to prevent the exhaust air from the silencer overflowing to the vacuum port side when a manifold is used, but it is incapable of completely preventing overflow. During usage, please inspect thoroughly with actual machine.
Also, in order to completely prevent the overflow of exhaust air, leave plenty of space between the check valve unit and adjacent ejector to avoid interference from the ejector's exhaust unit.

⚠Warning

① Cannot be used for vacuum retention.
② Use a vacuum release valve. (Without a vacuum release valve, the workpiece may not be released.)

Lead wire with connector part no.	Note
ZS-39-5G	Lead wire length 2 m (With connector cover)

Fitting (V port)

Symbol	Applicable tubing O.D.
0	Without fitting (M5 x 0.8)
1	ø3.2 (Straight)
2	ø4 (Straight)
3	ø6 (Straight)
4	ø3.2 (Elbow)
5	ø4 (Elbow)

* **The vacuum pressure switch mounted on this product is equivalent to our SMC product, the ZSE10 series compact digital pressure switch.**

● **Pressure switch correspondence table**

Vacuum Ejector ZQ series ZQ1□□-□□□□□□-□□□□-□□-□
Vacuum Pressure Switch for ZQ ZQ1-ZS□□□□-□-A
Digital Pressure Switch ZSE10 series ZSE10□-□-□-□□□□

For details regarding vacuum pressure switches, refer to the ZSE10 series in the Best Pneumatics No.8.

Rated pressure range/Output specifications
(Refer to rated pressure range/output specifications correspondence table)
Vacuum pressure switch lead wire specification
Vacuum pressure switch unit specification

Rated pressure range/Output specifications correspondence table

Vacuum pressure switch for ZQ	ZSE10 series	Specification
ZQ1-ZSEA□□□-□-A	ZSE10-□-A-□□□□	0 to –101 kPa/NPN open collector 2 outputs
ZQ1-ZSEB□□□-□-A	ZSE10-□-B-□□□□	0 to –101 kPa/PNP open collector 2 outputs
ZQ1-ZSEC□□□-□-A	ZSE10-□-C-□□□□	0 to –101 kPa/NPN open collector 1 output + analog voltage
ZQ1-ZSEE□□□-□-A	ZSE10-□-E-□□□□	0 to –101 kPa/PNP open collector 1 output + analog voltage
ZQ1-ZSFA□□□-□-A	ZSE10F-□-A-□□□□	100 to –100 kPa/NPN open collector 2 outputs
ZQ1-ZSFB□□□-□-A	ZSE10F-□-B-□□□□	100 to –100 kPa/PNP open collector 2 outputs
ZQ1-ZSFC□□□-□-A	ZSE10F-□-C-□□□□	100 to –100 kPa/NPN open collector 1 output + analog voltage
ZQ1-ZSFE□□□-□-A	ZSE10F-□-E-□□□□	100 to –100 kPa/PNP open collector 1 output + analog voltage

Dimensions

Type K1

ZQ1□□1U-K1□$^{5}_{6}$□□-□□□□□-□□

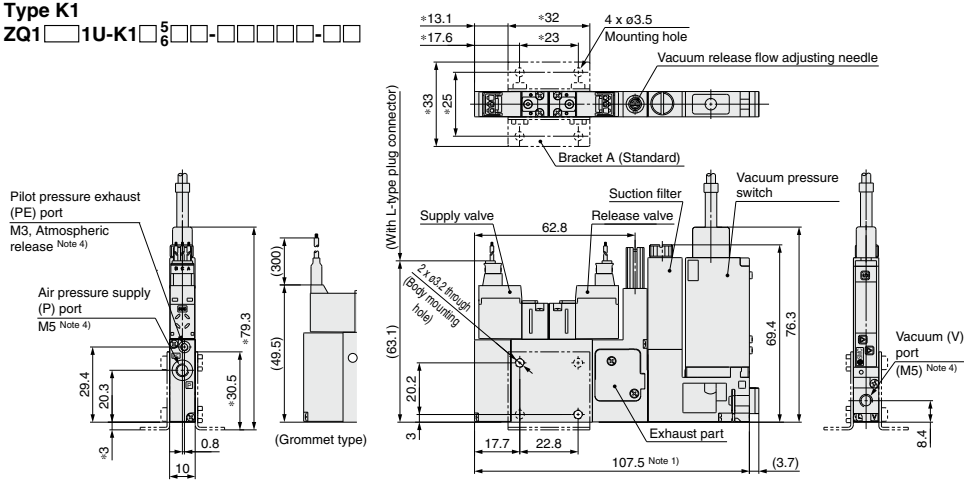

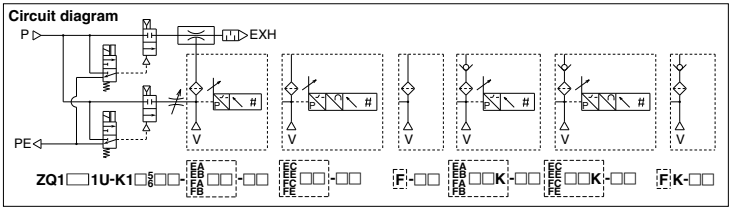

Note 1) The above dimensions are for ZQ1□□1U-K1□$^{5}_{6}$L-E□□G□-00. In case of ZQ1□□1U-K1□$^{5}_{6}$□□□-F□-00, the overall length is 87.2.
Note 2) Dimensions marked with "*" are those after bracket A is mounted.
Note 3) When the body is mounted, tighten with a torque of 0.6 ± 0.06 N·m. Using excessive torque may cause damage to the body.
Note 4) The pitches of P, V and PE ports are determined assuming the use of One-touch fittings. If used with other fittings, these may cause interference, dependant on their type and size. Please refer to the catalog to confirm the sizes of the fittings to be used.

Type J1

ZQ1□□1U-J1□□□□-□□□□□-□□

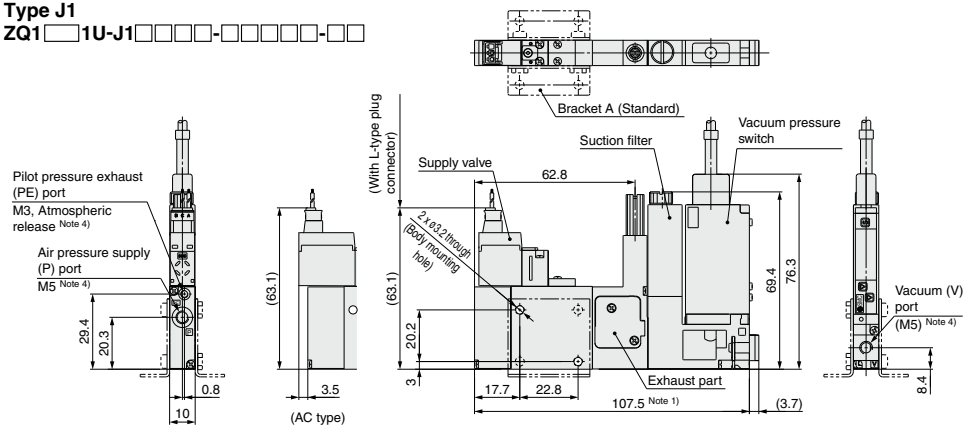

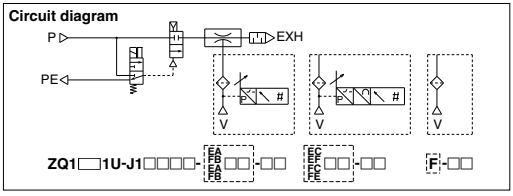

Note 1) The above dimensions are for ZQ1□□1U-J1□$^{5}_{6}$L-E□□G□-00. In case of ZQ1□□1U-J1□□□□-F□-00, the overall length is 87.2.
Note 2) The dimensions after bracket A is mounted are the same as those of the K1 type.
Note 3) When the body is mounted, tighten with a torque of 0.6 ± 0.06 N·m. Using excessive torque may cause damage to the body.
Note 4) The pitches of P, V and PE ports are determined assuming the use of One-touch fittings. If used with other fittings, these may cause interference, dependant on their type and size. Please refer to the catalog to confirm the sizes of the fittings to be used.

Dimensions

Type K2
ZQ1□□1U-K2□□□-□□□□□-□□

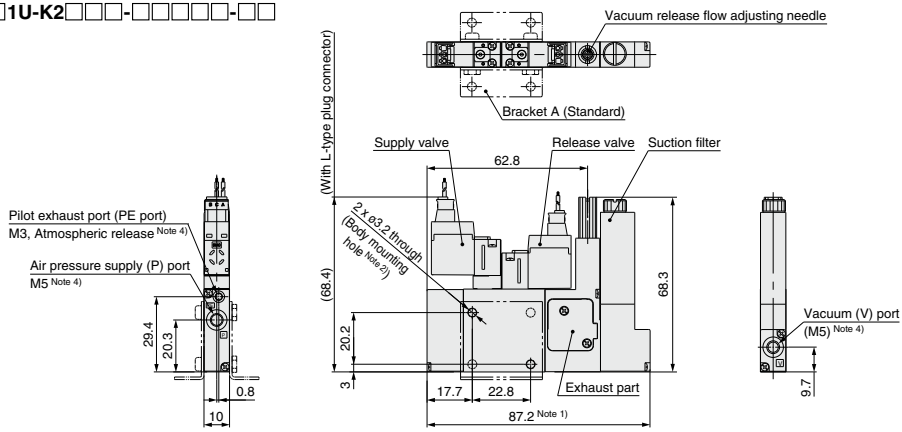

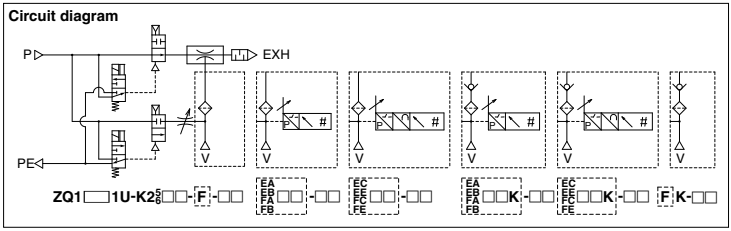

Note 1) The above dimensions are for ZQ1□□1U-K2□□L-F□-□□. In case of ZQ1□□1U-K2□□□-□□□□-□□, the overall length is 107.5.
Note 2) The dimensions after bracket A is mounted are the same as those of the K1 type.
Note 3) When the body is mounted, tighten with a torque of 0.6 ± 0.06 N·m. Using excessive torque may cause damage to the body.
Note 4) The pitches of P, V and PE ports are determined assuming the use of One-touch fittings. If used with other fittings, these may cause interference, dependant on their type and size. Please refer to the catalog to confirm the sizes of the fittings to be used.

Type J2
ZQ1□□1U-J2□□□-□□□□□-□□

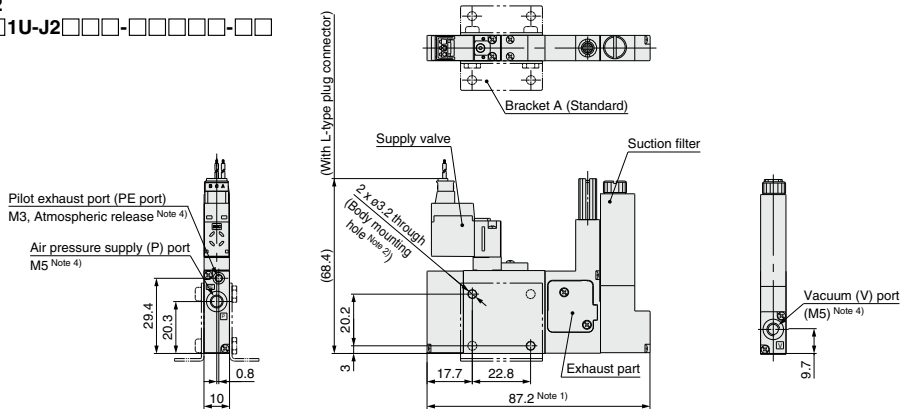

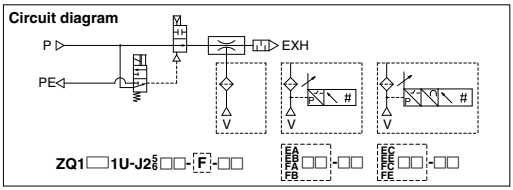

Note 1) The above dimensions are for ZQ1□□1U-J2□□L-F□. In case of ZQ1□□1U-J2□□□-□□□□-□□, the overall length is 107.5.
Note 2) The dimensions after bracket A is mounted are the same as those of the K1 type.
Note 3) When the body is mounted, tighten with a torque of 0.6 ± 0.06 N·m. Using excessive torque may cause damage to the body.
Note 4) The pitches of P, V and PE ports are determined assuming the use of One-touch fittings. If used with other fittings, these may cause interference, dependant on their type and size. Please refer to the catalog to confirm the sizes of the fittings to be used.

Dimensions

Type Q1, N1

ZQ1□1U-Q1$^{5}_{6}$□-□□□□□□-□□
ZQ1□1U-N1$^{5}_{6}$□-□□□□□□-□□

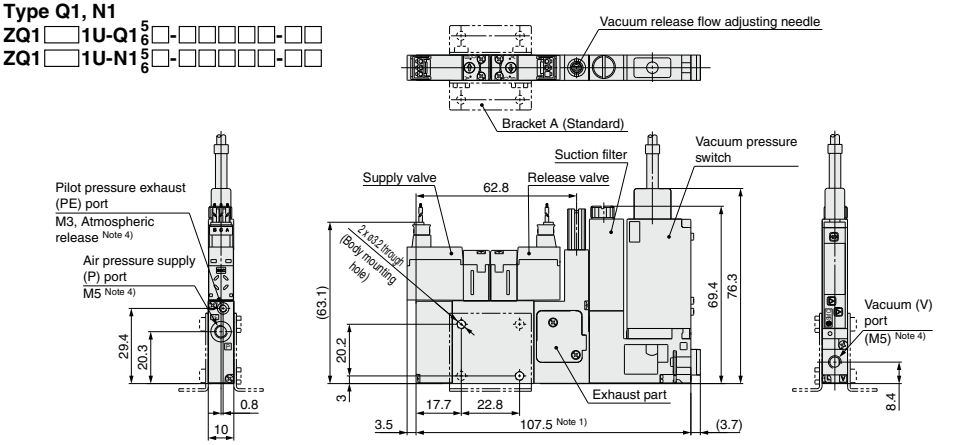

Circuit diagram

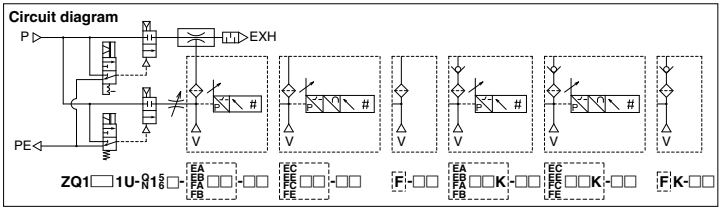

Note 1) The above dimensions are for ZQ1□1U-Q1$^{5}_{6}$L-E□□G□-00.
In case of ZQ1□1U-N1$^{5}_{6}$□-F□-00, the overall length is 87.2.
Note 2) The dimensions after bracket A is mounted are the same as those of the K1 type.
Note 3) When the body is mounted, tighten with a torque of 0.6 ± 0.06 N·m.
Using excessive torque may cause damage to the body.
Note 4) The pitches of P, V and PE ports are determined assuming the use of One-touch fittings. If used with other fittings, these may cause interference, dependant on their type and size. Please refer to the catalog to confirm the sizes of the fittings to be used.

Type Q2, N2

ZQ1□1U-Q2□□-□□□□□□-□□
ZQ1□1U-N2$^{5}_{6}$□-□□□□□□-□□

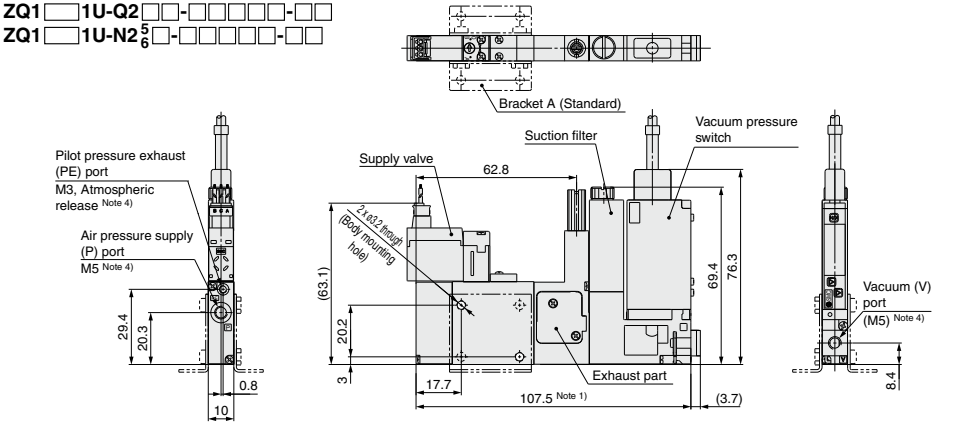

Circuit diagram

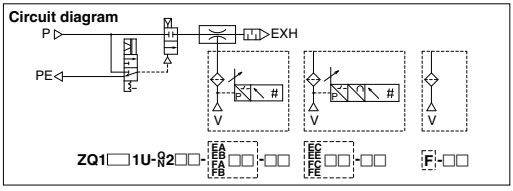

Note 1) The above dimensions are for ZQ1□1U-Q2$^{5}_{6}$L-E□□G□-00.
In case of ZQ1□1U-N2$^{5}_{6}$□-F□-00, the overall length is 87.2.
Note 2) The dimensions after bracket A is mounted are the same as those of the K1 type.
Note 3) When the body is mounted, tighten with a torque of 0.6 ± 0.06 N·m.
Using excessive torque may cause damage to the body.
Note 4) The pitches of P, V and PE ports are determined assuming the use of One-touch fittings. If used with other fittings, these may cause interference, dependant on their type and size. Please refer to the catalog to confirm the sizes of the fittings to be used.

Dimensions

Manifold type (without PD port)

ZZQ1□□-BSB

∗ZQ1□□3M-□□□□□-□□□□□-□

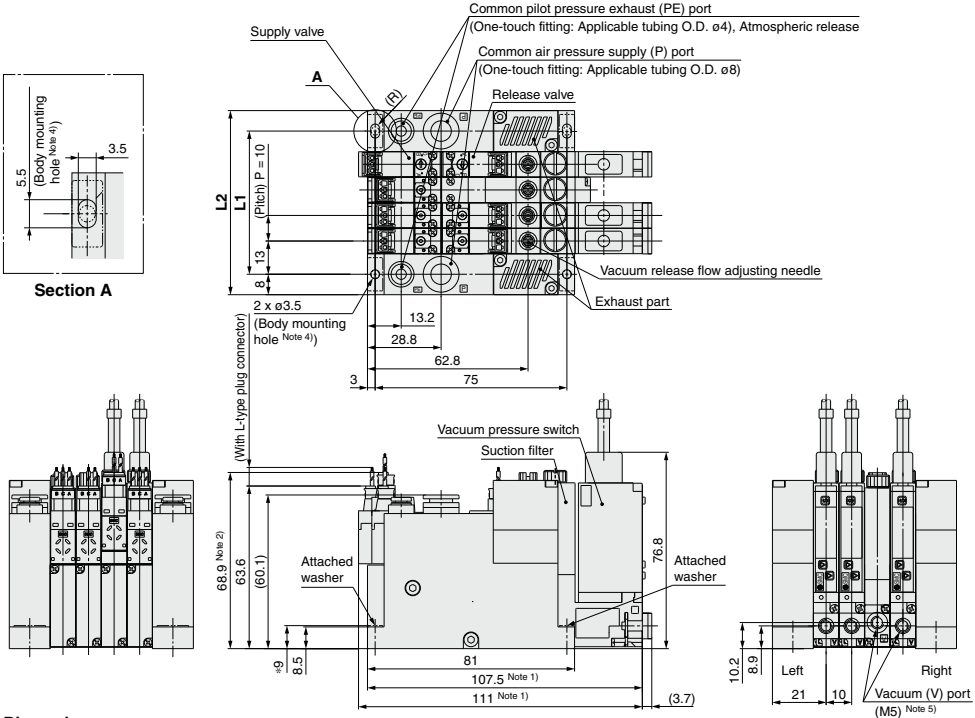

Dimensions (mm)

n	1	2	3	4	5	6	7	8
L1	26	36	46	56	66	76	86	96
L2	42	52	62	72	82	92	102	112

Note 1) The above dimensions are for ZZQ104-BSB.
- ∗ ZQ1□□3M-K1□$^{5}_{6}$L-E□G-0.
- ∗ ZQ1□□3M-K2$^{5}_{6}$L-E□GK-0.
- ∗ ZQ1□□3M-J1□$^{5}_{6}$L-F-0.
- ∗ ZQ1□□3M-Q1$^{5}_{6}$L-E□-0.
- ∗ In case of ZQ1□□3M-$^{K}_{J}$□□□□□-F□-0, the overall length is 87.2.
- ∗ In case of ZQ1□□3M-$^{Q}_{N}$□□□-F□-0, the overall length is 90.7.
- ∗ In case of ZQ1□□3M-$^{K}_{J}$□□□□□-$^{E}_{F}$□□□□-0, the overall length is 107.5.
- ∗ In case of ZQ1□□3M-$^{Q}_{N}$□□□-$^{E}_{F}$□□□□-0, the overall length is 111.

Note 2) ∗ The above dimensions are for ZQ1□□3M-$^{K}_{J}$2$^{5}_{6}$□□-$^{E}_{F}$□□□□-□.

Note 3) ∗ Dimensions marked with "∗" are those after the attached square bracket is mounted.

Note 4) When the body is mounted, tighten with a torque of 0.6 ± 0.06 N·m.
Using excessive torque may cause damage to the body.

Note 5) The pitches of V ports are determined assuming the use of One-touch fittings. If used with other fittings, these may cause interference, dependant on their type and size. Please refer to the catalog to confirm the sizes of the fittings to be used.

Note 6) When the release valve is not used, design the circuit for vacuum release separately in order to release a workpiece.

Circuit diagram

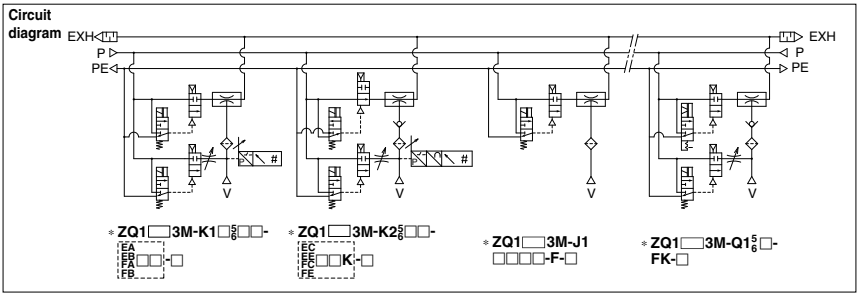

Dimensions

Manifold type (with PD port)

ZZQ1□□-BSC

∗ZQ1□□3M-□□□□□-□□□□□-□

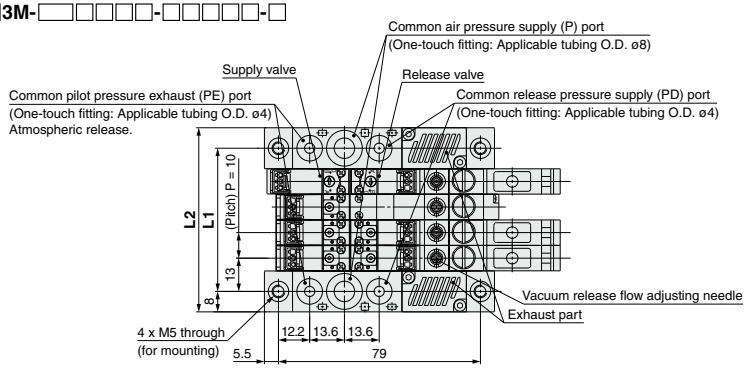

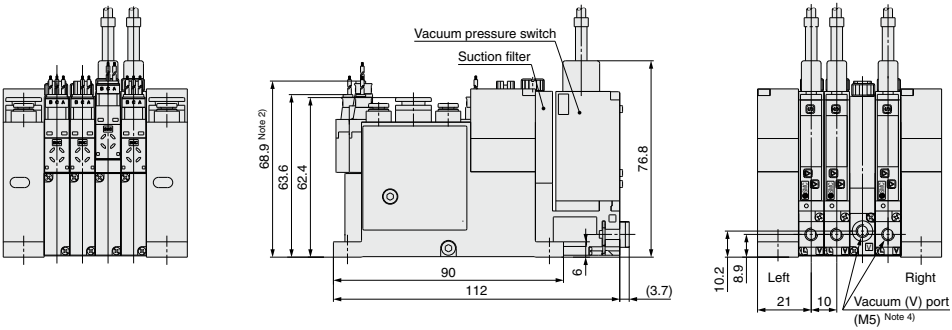

Dimensions (mm)

n	1	2	3	4	5	6	7	8
L1	26	36	46	56	66	76	86	96
L2	42	52	62	72	82	92	102	112

Note 1) The above dimensions are for ZZQ104-BSC.
- ∗ ZQ1□3M-K1□$^{5}_{6}$L-E□G-0.
- ∗ ZQ1□3M-K2$^{5}_{6}$L-E□G-0.
- ∗ ZQ1□3M-J1□$^{5}_{6}$L-F□-0.
- ∗ ZQ1□3M-Q1$^{5}_{6}$L-E□G-0.
- ∗ In case of ZQ1□3M-□□□□□-F□-0, the overall length is 91.7.
- ∗ In case of ZQ1□3M-□□□□□-E□G-0, the overall length is 112.

Note 2) ∗ The above dimensions are for ZQ1□3M-$^{K}_{J}$2$^{5}_{6}$□□-□□□□□-□.
Note 3) When the body is mounted, tighten with a torque of 0.6 ± 0.06 N·m. Using excessive torque may cause damage to the body.
Note 4) The pitches of V ports are determined assuming the use of One-touch fittings. If used with other fittings, these may cause interference, dependant on their type and size. Please refer to the catalog to confirm the sizes of the fittings to be used.
Note 5) When the release valve is not used, design the circuit for vacuum release separately in order to release a workpiece.

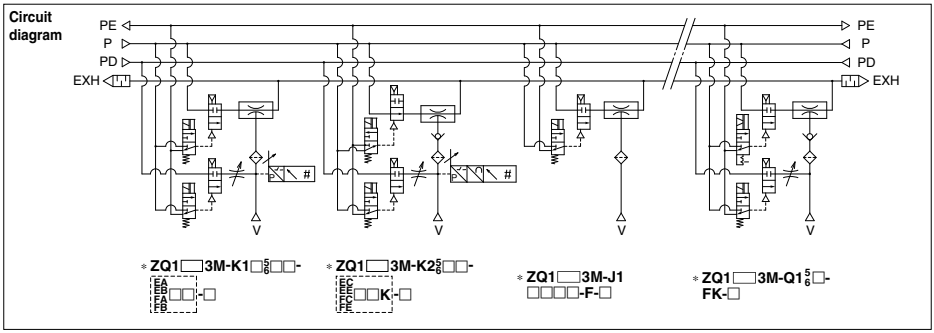

Dimensions

Fittings / Fitting type filter dimensions after installation

V port

<With vacuum pressure switch>

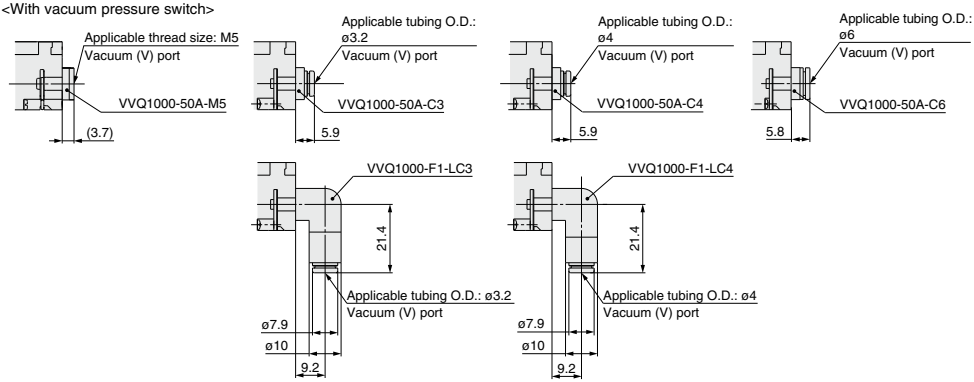

V port

<Suction filter only>

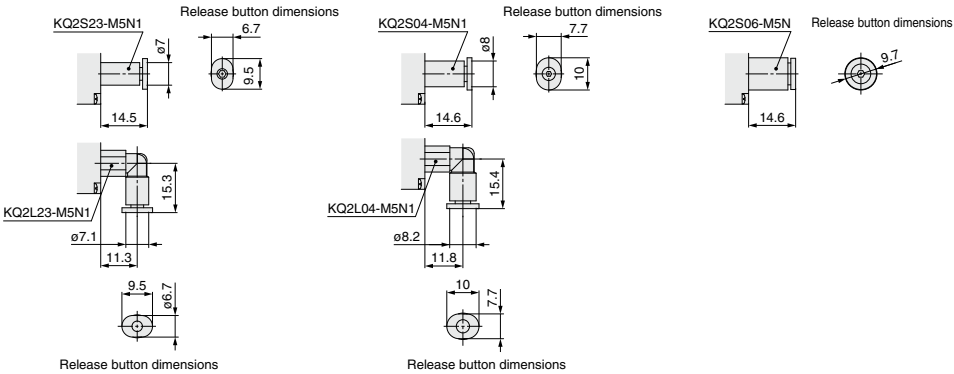

P port

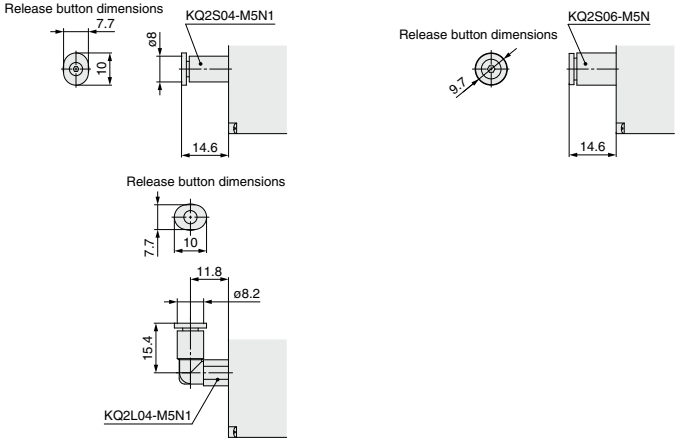

Manifold Exploded View

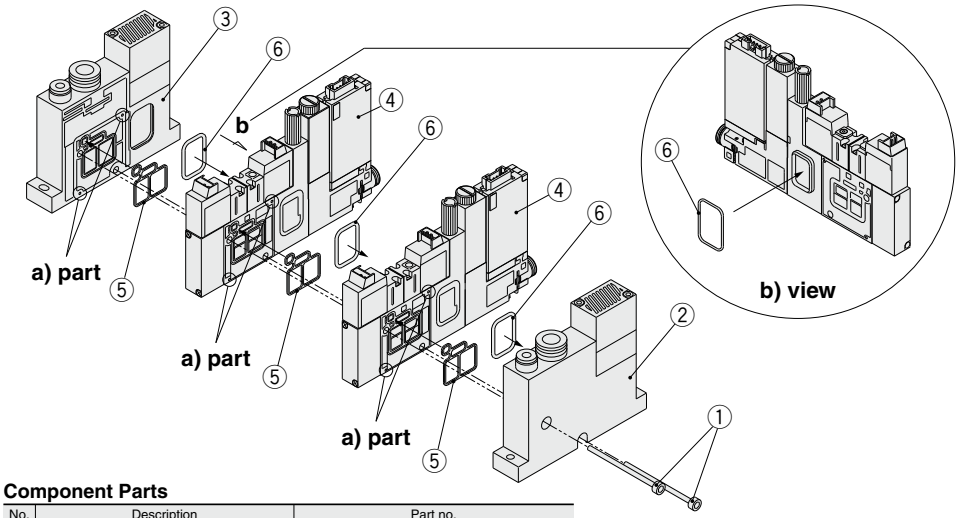

Component Parts

No.	Description	Part no.
1	**Hexagon socket head cap screw**	Refer to "How to Order" below.
2	**End block L**	Refer to "Table (1)" (including 1 pc. of ⑥).
3	**End block R**	Refer to "Table (1)" (including 1 pc. of ⑤).
4	**Ejector assembly**	ZQ1□□3M-□□□□□□-□□□□□-□ (-Q)[Note 1)] (1 pc. each in ⑤ and ⑥ is included.)
5	**Ejector body gasket for manifold**	ZQ-3-005-10AS [Note 2)]
6	**Exhaust block gasket**	ZQ-3-009-10AS [Note 2)]

Note 1) Refer to pages 102 and 103 for detailed description of "How to Order".
Note 2) 10 pcs. are included in one set.

Table (1)

Description	With PD port	Without PD port
End block L	ZQ1L-2-BSB-AS	ZQ1L-1-BSB-AS
End block R	ZQ1R-2-BSB-AS	ZQ1R-1-BSB-AS

Working Procedure

Disassembly

Loosen and remove the clamp rod ①.

Assembly

1. Install the ejector body gasket for manifold ⑤ into the gasket groove of each ejector assembly ④. Install the exhaust block gasket ⑥ around the projected part.
2. Install the exhaust block gasket ⑥ around the projected part of the end block L ②.
3. Install the ejector body gasket for manifold ⑤ into the gasket groove of the end block R ③.
4. Align the ejector assemblies ④, end block (L) ②, and end block (R) ③ using positioning pins (at the two "a" positions) and fasten with clamp rods ① (2 pcs.) (with a tightening torque of 0.6 N·m ± 0.06 N·m).

How to Order Hexagon Socket Head Cap Screw

ZQ−STB 05

Number of stations

01	1 station
02	2 stations
⋮	⋮
08	8 stations

Note) 2 pcs. are included in one set.

Replacement of V Port Fittings (With vacuum pressure switch)

V port fittings are cassette style for easy replacement.
The fittings are blocked by a clip. Remove the clip with a flat blade screw-driver, etc. to replace the fittings.
When mounting the fittings, after inserting the fitting assembly until it stops, then put the clip into the prescribed position completely.

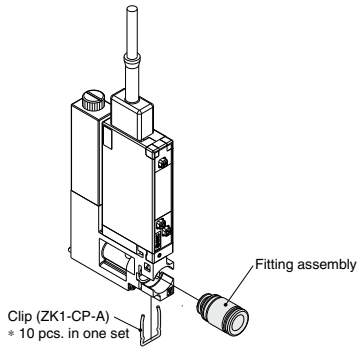

Applicable tubing O.D.	Straight	Elbow
Applicable tubing O.D. ø3.2	VVQ1000-50A-C3	VVQ1000-F1-LC3
Applicable tubing O.D. ø4	VVQ1000-50A-C4	VVQ1000-F1-LC4
Applicable tubing O.D. ø6	VVQ1000-50A-C6	—
M5 female thread	VVQ1000-50A-M5	—

Made to Order Specifications

Please contact SMC for detailed dimensions, specifications and lead times.

Made to Order

1 Port Exhaust Specifications

Manifold **ZZQ1** **Stations*** **−B2□−X125**

Port exhaust specifications

Exhaust port is changed for "Port Exhaust Specifications."

Dimensions

Manifold type (without PD port)
ZZQ1□-B2B-X125
***ZQ1□3M-□□□□□-□□□□□-□(-Q)**

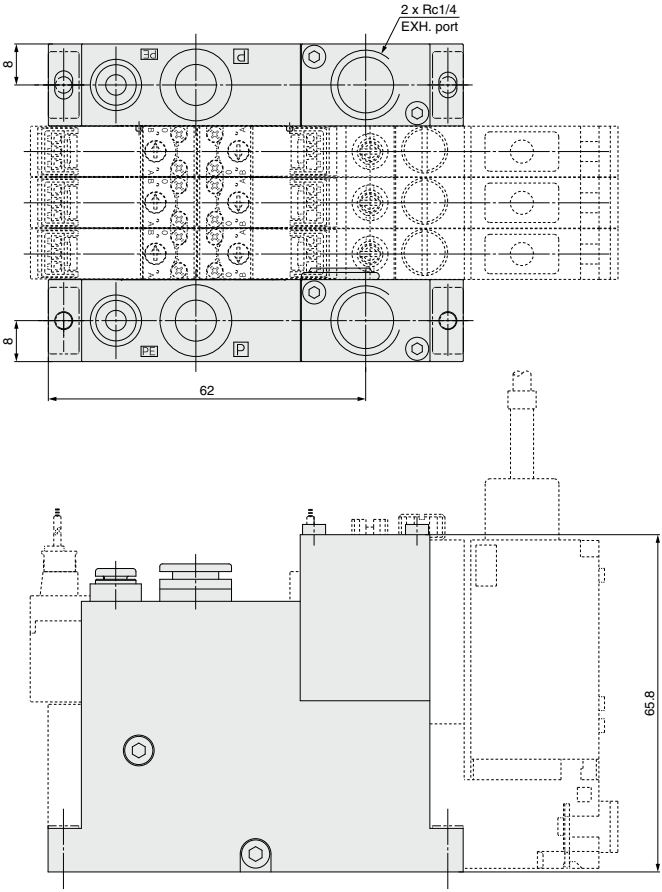

Made to Order Specifications

Please contact SMC for detailed dimensions, specifications and lead times.

2 Pilot Valve for Supply: Normally Open DC Low Wattage Specification

Power consumption (W): 0.3 [Inrush 1.5, Holding 0.3]

ZQ1 10 3M – K2 Y □□□ – □□□□ – □ – X158

Nozzle nominal size

Solenoid valve combination

K2	Supply valve: Normally open
	Vacuum release valve: Normally closed
J2	Supply valve: Normally open
	Vacuum release valve: None

Solenoid valve rated voltage

5	24 VDC
6	12 VDC

Electrical entry

L	L-type plug
G	Grommet

Manual override

Nil	Non-locking push
B	Locking type

Vacuum pressure switch suction filter

Fitting

Pilot valve for supply Normally open DC low wattage specification

· Normally open supply valve with low wattage type pilot valve mounted
· When the normally open specification is selected as a countermeasure for power failure, the temperature increase of the solenoid valve can be suppressed in the operation cycle where the vacuum suspension state (supply valve energizing) is longer than the vacuum generation state.

Dimensions: Same as standard type.

Space Saving Vacuum Pump System

ZQ Series

[Option]
Note) CE-compliant:
For DC only.

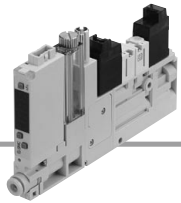

How to Order

Vacuum Pump Unit

ZQ1000 U – K1 □ 5 L □ – EA □ G – 3 3 – □ – □

① ② ③ ④ ⑤ ⑥ ⑦ ⑧ ⑨ ⑩ ⑪ ⑫ ⑬

① Body type

U	For single unit
M	For manifold

② Solenoid valve combination (Refer to Table (1).)

Symbol	Supply valve	Vacuum release valve
K1	Normally closed	Normally closed
K2 Note 1)	Normally open	Normally closed
J1	Normally closed	None
J2 Note 1)	Normally open	None
Q1	Latching positive common	Normally closed
Q2	Latching positive common	None
N1	Latching negative common	Normally closed
N2	Latching negative common	None

⚠ The air in the adsorption section of this product is not released to the atmosphere at the vacuum suspension state.
As for K1, K2, Q1 and N1, use the vacuum release valve when a workpiece is detached.
Concerning J1, J2, Q2 and N2, devise the circuit for the vacuum release additionally when a workpiece is detached.

Note 1) In cases when K2 or J2 (supply valve normally open) is selected for the solenoid valve combination, when vacuum is stopped for long periods of time (10 minutes or more), do not continue to energize the supply valve, and shut off the air supply.

③ Pilot valve (Refer to Table (1).)

Nil	Standard (DC: 1 W) Note 2)
Y	DC low wattage type (0.5 W) Note 2)

Note 2) Avoid energizing the solenoid valve for long periods of time. (Refer to Specific Product Precautions 1; Caution on Design and Selection.)

④ Solenoid valve rated voltage (Refer to Table (1).)

		CE-compliant
1 Note 3)	100 VAC (50/60 Hz)	—
2 Note 3)	200 VAC (50/60 Hz)	—
3 Note 3)	110 VAC (50/60 Hz)	—
4 Note 3)	220 VAC (50/60 Hz)	—
5	24 VDC	●
6	12 VDC	●

Note 3) CE-compliant products are not available for "1", "2", "3" and "4".

Table (1) Combination of Solenoid Valve, Pilot Valve and Rated Voltage

Combination no.	Solenoid valve combination symbol	Pilot valve symbol	Applicable power supply voltage (V)					
			100 AC	200 AC	110 AC	220 AC	24 DC	12 DC
①	**K1**	**Nil**	—	—	—	—	●	●
②	**K1**	**Y**	—	—	—	—	●	●
③	**K2**	**Nil**	—	—	—	—	●	●
④	**J1**	**Nil**	●	●	●	●	●	●
⑤	**J1**	**Y**	—	—	—	—	●	●
⑥	**J2**	**Nil**	—	—	—	—	●	●
⑦	**Q1**	**Nil**	—	—	—	—	●	●
⑧	**Q2**	**Nil**	●	●	●	●	●	●
⑨	**N1**	**Nil**	—	—	—	—	●	●
⑩	**N2**	**Nil**	—	—	—	—	●	●

∗ Combinations ① to ⑩ in the above table are the only possible options.

⑤ Electrical entry

L	L-type plug connector, with 0.3 m lead wire, with light/surge voltage suppressor	
LO	L-type plug connector, without connector, with light/surge voltage suppressor	
G	Grommet, with 0.3 m lead wire (Latching/AC type: Not applicable)	

⑥ Manual override Note 4)

Nil	Non-locking push type Latching type: Push-locking type
B	Locking type (Q1/Q2/N1/N2: Not applicable)

Note 4) Latching type supply valve: Available in "Nil" only.
In this case, the supply valve and release valve come with a push-locking type.

⑦ Vacuum pressure switch suction filter Note 5)

EA	0 to –101 kPa/NPN open collector 2 outputs, with suction filter
EB	0 to –101 kPa/PNP open collector 2 outputs, with suction filter
EC	0 to –101 kPa/NPN open collector 1 output + analog voltage, with suction filter
EE	0 to –101 kPa/PNP open collector 1 output + analog voltage, with suction filter
FA	100 to –100 kPa/NPN open collector 2 outputs, with suction filter
FB	100 to –100 kPa/PNP open collector 2 outputs, with suction filter
FC	100 to –100 kPa/NPN open collector 1 output + analog voltage, with suction filter
FE	100 to –100 kPa/PNP open collector 1 output + analog voltage, with suction filter
F	Suction filter only

Note 5) The filter included in this product is of an simple type, and will become clogged quickly in environments with high quantities of dust or particulates. Please make additional use of an air suction filter of the ZFA, ZFB or ZFC series.

⚠Warning

The filter case of this suction filter is made of nylon. Contact with alcohol or similar chemicals may cause it to be damaged. Also, do not use the filter when these chemicals are present in the atmosphere.

⑧ Vacuum pressure switch unit specifications

Nil	With unit switching function Note 6)
M	Fixed SI unit Note 7)
P	With unit switching function Note 6) (Initial value psi)

Note 6) Under the New Measurement Law, sales of switches with the unit switching function are not allowed for use in Japan.
Note 7) Fixed unit: kPa

⑨ Vacuum pressure switch lead wire specifications

Nil	Without connector
G	Lead wire with connector (Lead wire length 2 m) With connector cover

⑩ Fitting (P port) Note 8)

Symbol	Applicable tubing O.D.
0	Without fitting (M5 x 0.8)
1	ø3.2 (Straight)
2	ø4 (Straight)
3	ø6 (Straight)
4	ø3.2 (Elbow)
5	ø4 (Elbow)

⑪ Fitting (PS / PV port) Note 8)

Symbol	Applicable tubing O.D.	Object spec.
Nil	Without port	Manifold
0	Without fitting (M5 x 0.8)	Single unit
2	ø4 (Straight)	
3	ø6 (Straight)	
5	ø4 (Elbow)	

⑫ Bracket A

Nil	With bracket A
N	Without bracket A Note 9)

Note 8) For filter only (Without vacuum pressure switch)
Single unit: When neither V port fitting nor PS/PV port fitting are needed, enter nothing or –00 in the dotted line "How to Order".
Manifold specifications: When the V port fitting is not needed, enter nothing or -0 in the dotted line "How to Order".
Note 9) Only applicable to the body type U.

⑬ CE-compliant

Nil	—
Q	CE-compliant

Note) CE-compliant: For DC only.

How to Order

Manifold ZZQ1 08 – □ O □

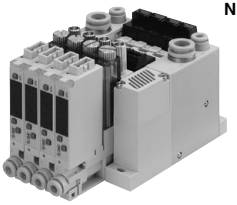

Number of stations

01	1 station
02	2 stations
⋮	⋮
08	8 stations

Vacuum pressure supply port (PV port) Port location (Refer to Table (1).)

L	Left side
R	Right side

Table (1) Air Pressure Supply Port Location on the Manifold

PD port	Port location \ Manifold	Left			Right		
		PS	PV	PD	PS	PV	PD
B	L (Left side)	—	●	—	● Note)	—	—
	R (Right side)	● Note)	—	—	—	●	—
C	L (Left side)	—	●	●	●	—	●
	R (Right side)	●	—	●	—	●	●

Note) The position of each port is shown as right and left sides viewed from the front side of the vacuum port.
Release pressure is commonly supplied from the PS port.
∗ PS: Pilot presure supply port, PV: Vacuum pressure supply port, PD: Release pressure supply port

Release pressure supply port (PD port)

B	None (Release pressure is supplied from the PS port.)
C	Provided (Air can be alternatively supplied from the PS port.)

Manifold Ordering Example

ZZQ108-ROB → 1 pc.
∗ZQ1000M-K15L-EAG (-Q)
→ 4 pcs. (Stations 1 to 4)
∗ZQ1000M-K1Y5L-EAG (-Q)
→ 4 pcs. (Stations 5 to 8)

Note) By viewing the front side of vacuum port (V), stations are counted starting from station 1 on the left side.

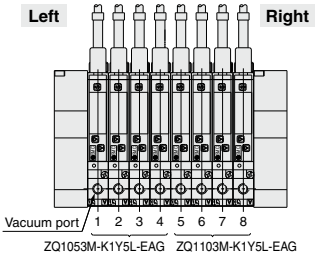

Specifications

Common

Switching method for vacuum/release valve		Piloted
Cv factor		0.11
Supply pressure range	**Vacuum pressure supply port (PV)**	0 to –101.3 kPa
	Pilot/Pressure port (PS)	0.3 to 0.5 MPa (Normally open: 0.3 to 0.45 MPa)
	Supply pressure port for vacuum release (PD)	0.3 to 0.5 MPa (Normally open: 0.3 to 0.45 MPa), and also PD pressure PS pressure
Operating temperature range		5 to 50°C
Fluid		Air

Weight

Single unit	With suction filter Note 1)	95 g
	With vacuum pressure switch and suction filter Note 2)	109 g
End plate assembly for manifold		122 g

Note 1) Including a 0.3 m connector for supply valve and vacuum release valve.
Note 2) Including a 0.3 m connector for supply valve and vacuum release valve and a 2 m connector for vacuum pressure switch.

◎ **Calculation of weight for the manifold type**
(Single unit weight) x (Number of stations) + (Weight of end plate assembly for manifold)

Example) Vacuum pressure switch + 8 stations with suction filter
109 g x 8 + 122 g = 994 g

Supply Valve / Vacuum Release Valve

Item \ Type		Normally closed		Latching type	Normally open
		Standard (1 W)	Low wattage type (0.5 W)		
Model (Refer to "How to Order" for solenoid valves on page 122.)		**VQ110-□**	**VQ110Y-□**	**VQ110$^{L}_{N}$-□**	**ZQ1-VQ120-□**
Manual override		Non-locking push type / Locking type (Tool type)		Push-locking type	Non-locking push type / Locking type (Tool type)
Rated coil voltage		12, 24 VDC, 100, 110, 200, 220 VAC	12, 24 VDC	12, 24 VDC, 100, 110, 200, 220 VAC	12, 24 VDC
Power consumption (current value)	**DC**	1 W	0.5 W	1 W	
	100 VAC	0.5 VA (5 mA)	—	0.6 VA (6 mA)	—
	110 VAC	0.55 VA (5 mA)	—	0.65 VA (5.9 mA)	—
	200 VAC	1.0 VA (5 mA)	—	1.2 VA (6 mA)	—
	220 VAC	1.1 VA (5 mA)	—	1.3 VA (5.9 mA)	—
Electrical entry		Grommet L plug connector L-type plug connector (with light/surge voltage suppressor)		L plug connector (with light/surge voltage suppressor)	Grommet Light/Surge voltage suppressor (with light/surge voltage suppressor)

Specifications

Vacuum Pressure Switch

Model			ZQ1-ZSE (ZSE10)	ZQ1-ZSF (ZSE10F)
Rated pressure range			0 to –101 kPa	–100 to 100 kPa
Set pressure range/Display pressure range			10 to –105 kPa	–105 to 105 kPa
Withstand pressure			500 kPa	
Minimum setting unit			0.1 kPa	
Power supply voltage			12 to 24 VDC ±10%, Ripple (p-p) 10% or less (with power supply polarity protection)	
Current consumption			40 mA or less	
Switch output			NPN or PNP open collector: 2 outputs (selectable)	
	Maximum load current		80 mA	
	Maximum applied voltage		28 V (with NPN output)	
	Residual voltage		2 V or less (with load current of 80 mA)	
	Response time		2.5 ms or less (Response time selections with anti-chattering function: 20, 100, 500, 1000 and 2000 ms)	
	Short circuit protection		With short-circuit protection	
Repeatability			±0.2% F.S. ±1 digit	
Hysteresis	**Hysteresis mode**		Variable (0 or above) Note 1)	
	Window comparator mode			
Analog output	**Voltage output**	Output voltage (rated pressure range)	1 to 5 V ±2.5% F.S.	
		Linearity	±1% F.S. or less	
		Output impedance	Approx. 1 kΩ	
Display system			3 1/2-digit, 7 segment LED 1-color display (Red)	
Display accuracy			±2% F.S. ±1 digit (at ambient temperature of 25 ±3°C)	
Operation indicator light			Lights when ON, OUT1: Green, OUT2: Red	
Environ-mental resistance	**Enclosure**		IP40	
	Ambient humidity range		Operating/Stored: 35 to 85% RH (with no condensation)	
	Withstand voltage		1000 VAC for 1 min. between terminals and housing	
	Insulation resistance		50 MΩ or more (500 VDC measured via megohmmeter) between terminals and housing	
Temperature characteristics			±2% F.S. (at 25°C of ambient temperature range between –5 and 50°C)	
Lead wires			Oil-resistant cabtire cord Cross section: 0.15 mm^2 (AWG26), 5 cores, Conductor O.D.: 1.0 mm	

Note 1) If the applied voltage fluctuates around the set-value, the hysteresis must be set to a value more than the fluctuating width, otherwise chattering will occur.
Note 2) For others, refer to ejector specifications on page 120.

Construction

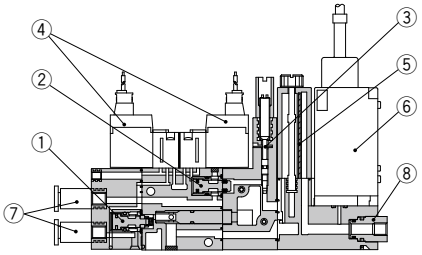

Component Parts

No.	Description	Material
1	**Poppet valve assembly for supply valve**	—
2	**Poppet valve assembly for vacuum release valve**	—
3	**Vacuum release flow adjusting needle**	Stainless steel

Replacement Parts

No.	Description	Material	Part no.
4	**Solenoid valve**	—	Refer to page 122.
5	**Filter element**	PVA sponge	XT534-5-001-AS
6	**Vacuum pressure switch**	—	Refer to page 122.
7	**Fitting**	—	—
8	**Fitting**	—	—

How to Order

Solenoid Valve

VQ1 1 0 □ – 5 L □

ZQ1-VQ1 2 0 □ – 5 L □

Actuation

1	Normally closed

Actuation

2	Normally open

Pilot valve

Nil	Standard (1 W)

Solenoid valve rated voltage

5	24 VDC
6	12 VDC

Pilot valve

Nil	Standard (DC: 1 W)
Y	Low wattage type (0.5 W) ∗ AC type: Not applicable
L	Latching positive common
N	Latching negative common

Solenoid valve rated voltage

1	100 VAC (50/60 Hz)
2	200 VAC (50/60 Hz)
3	110 VAC (50/60 Hz)
4	220 VAC (50/60 Hz)
5	24 VDC
6	12 VDC

Manual override Note)

Nil	Non-locking push type Latching type: Push-locking type
B	Locking type

Note) Latching type: Available in "Nil" only

Electrical entry Note)

L	L-type plug connector, with 0.3 m lead wire	
LO	L-type plug connector, without connector	
G	Grommet, with 0.3 m lead wire (Latching/AC type: Not applicable)	

Note) Mounting screws are attached.

Connector assembly part no.

● **How to order connector assembly**

- **Single**
  AXT661-14A-□

DC positive common

- **Latching**
  AXT661-13A-□

DC negative common

- **Latching**
  AXT661-13AN-□

100 VAC

- **Single**
  AXT661-31A-□
- **Latching**
  AXT661-32A-□

200 VAC

- **Single**
  AXT661-34A-□
- **Latching**
  AXT661-35A-□

Connector, socket (3 pcs) only
AXT661-12A

Lead wire length

Nil	300 mm
6	600 mm
10	1000 mm
20	2000 mm
30	3000 mm

● **Lead wire length of the plug connector**

The lead wire length for a valve with a lead wire is 300 mm. When in need of a valve with a lead wire longer than 600 mm, place an order for a valve without a connector and connector assembly.

Vacuum Pressure Switch

ZQ1-ZS □ □ □ □ – □ – A

Vacuum pressure switch specifications

EA	0 to –101 kPa/NPN open collector 2 outputs, with suction filter
EB	0 to –101 kPa/PNP open collector 2 outputs, with suction filter
EC	0 to –101 kPa/NPN open collector 1 output + analog voltage, with suction filter
EE	0 to –101 kPa/PNP open collector 1 output + analog voltage, with suction filter
FA	100 to –100 kPa/NPN open collector 2 outputs, with suction filter
FB	100 to –100 kPa/PNP open collector 2 outputs, with suction filter
FC	100 to –100 kPa/NPN open collector 1 output + analog voltage, with suction filter
FE	100 to –100 kPa/PNP open collector 1 output + analog voltage, with suction filter

Vacuum pressure switch unit specifications

Nil	With unit switching function Note 1)
M	Fixed SI unit Note 2)
P	With unit switching function Note 1) (Initial value psi)

Note 1) Under the New Measurement Law, sales of switches with the unit switching function are not allowed for use in Japan.
Note 2) Fixed unit: kPa

Vacuum pressure switch lead wire specifications

Nil	Without connector
G	Lead wire with connector (lead wire length 2 m) With connector cover

Check valve Note 3)

Nil	None
K	With check valve

Note 3) The check valve has a function to prevent the exhaust air from the silencer overflowing to the vacuum port side when a manifold is used, but it is incapable of completely preventing overflow. During usage, please inspect thoroughly with actual machine.
Also, in order to completely prevent the overflow of exhaust air, leave plenty of space between the check valve unit and adjacent ejector to avoid interference from the ejector's exhaust unit.

⚠Warning

① Cannot be used for vacuum retention.
② Use a vacuum release valve. (Without a vacuum release valve, the workpiece may not be released.)

Lead wire with connector part no.	Note
ZS-39-5G	Lead wire length 2 m (With connector cover)

Fitting (V port)

Symbol	Applicable tubing O.D.
0	Without fitting (M5 x 0.8)
1	ø3.2 (Straight)
2	ø4 (Straight)
3	ø6 (Straight)
4	ø3.2 (Elbow)
5	ø4 (Elbow)

∗ **The vacuum pressure switch mounted on this product is equivalent to our SMC product, the ZSE10 series compact digital pressure switch.**

● **Pressure switch correspondence table**

Vacuum Pump System ZQ series	ZQ1□□-□□□□□-□□□□-□□-□
Vacuum Pressure Switch for ZQ	ZQ1-ZS□□□□-□-A
Digital Pressure Switch ZSE10 series	ZSE10□-□-□-□□□□

For details regarding vacuum pressure switches, refer to the ZSE10 series in the Best Pneumatics No.8.

Rated pressure range/Output specifications
(Refer to rated pressure range/output specifications correspondence table)

Vacuum pressure switch lead wire specification

Vacuum pressure switch unit specification

Rated pressure range/Output specifications correspondence table

Vacuum pressure switch for ZQ	ZSE10 series	Specification
ZQ1-ZSEA□□□-□-A	ZSE10-□-A-□□□□	0 to –101 kPa/NPN open collector 2 outputs
ZQ1-ZSEB□□□-□-A	ZSE10-□-B-□□□□	0 to –101 kPa/PNP open collector 2 outputs
ZQ1-ZSEC□□□-□-A	ZSE10-□-C-□□□□	0 to –101 kPa/NPN open collector 1 output + analog voltage
ZQ1-ZSEE□□□-□-A	ZSE10-□-E-□□□□	0 to –101 kPa/PNP open collector 1 output + analog voltage
ZQ1-ZSFA□□□-□-A	ZSE10F-□-A-□□□□	100 to –100 kPa/NPN open collector 2 outputs
ZQ1-ZSFB□□□-□-A	ZSE10F-□-B-□□□□	100 to –100 kPa/PNP open collector 2 outputs
ZQ1-ZSFC□□□-□-A	ZSE10F-□-C-□□□□	100 to –100 kPa/NPN open collector 1 output + analog voltage
ZQ1-ZSFE□□□-□-A	ZSE10F-□-E-□□□□	100 to –100 kPa/PNP open collector 1 output + analog voltage

Dimensions

Type K1
ZQ1000U-K1□$^{5}_{6}$□□-□□□□-□□

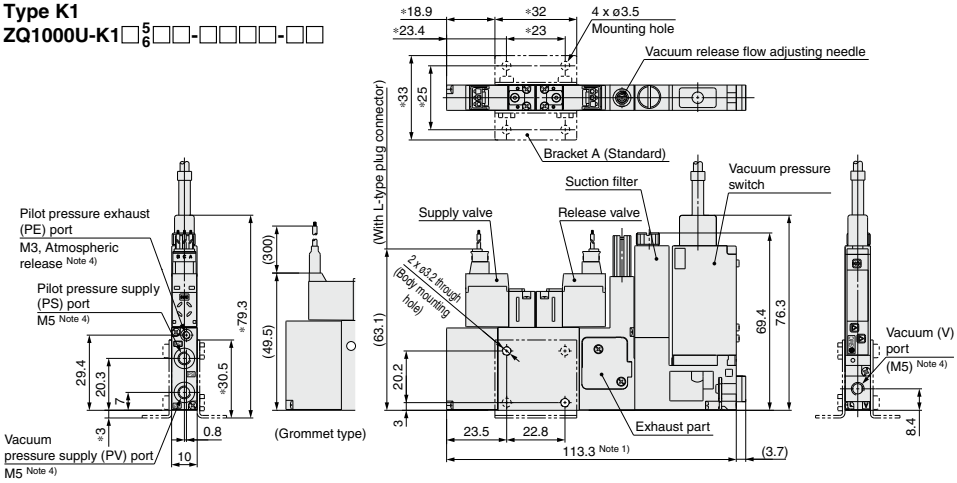

Circuit diagram

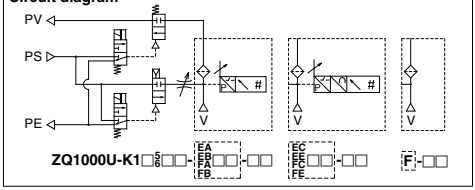

Note 1) The above dimensions are for ZQ1000U-K1□$^{5}_{6}$L-E□□G□-00.
In case of ZQ1000U-K1□$^{5}_{6}$□□-F□-00, the overall length is 87.2.
Note 2) Dimensions marked with "*" are those after bracket A is mounted.
Note 3) When the body is mounted, tighten with a torque of 0.6 ± 0.06 N·m.
Using excessive torque may cause damage to the body.
Note 4) The pitches of PS, PV, V and PE ports are determined assuming the use of One-touch fittings. If used with other fittings, these may cause interference, dependant on their type and size. Please refer to the catalog to confirm the sizes of the fittings to be used.

Type J1
ZQ1000U-J1□□□□-□□□□-□□

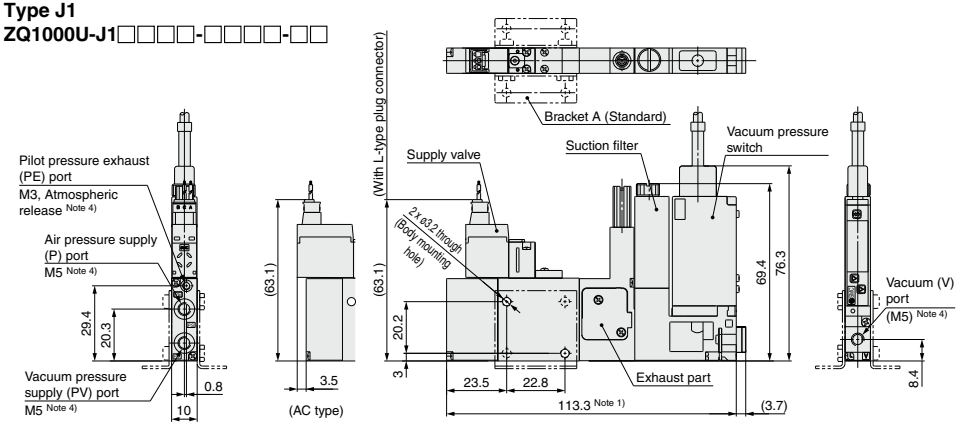

Circuit diagram

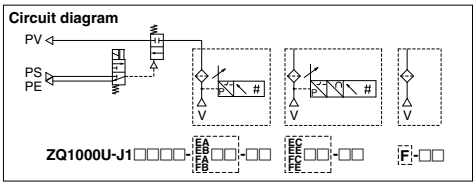

Note 1) The above dimensions are for ZQ1000U-J1□$^{5}_{6}$L-E□□G-00.
In case of ZQ1000U-J1□□□□-F□-00, the overall length is 87.2.
Note 2) The dimensions after bracket A is mounted are the same as those of the K1 type.
Note 3) When the body is mounted, tighten with a torque of 0.6 ± 0.06 N·m.
Using excessive torque may cause damage to the body.
Note 4) The pitches of PS, PV, V and PE ports are determined assuming the use of One-touch fittings. If used with other fittings, these may cause interference, dependant on their type and size. Please refer to the catalog to confirm the sizes of the fittings to be used.
Note 5) In order to release a workpiece, design the circuit for vacuum release separately.

Dimensions

Type K2
ZQ1000U-K2□□□-□□□□-□□□

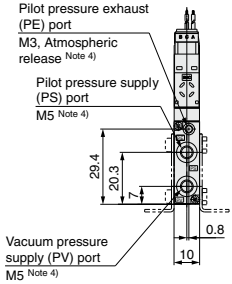

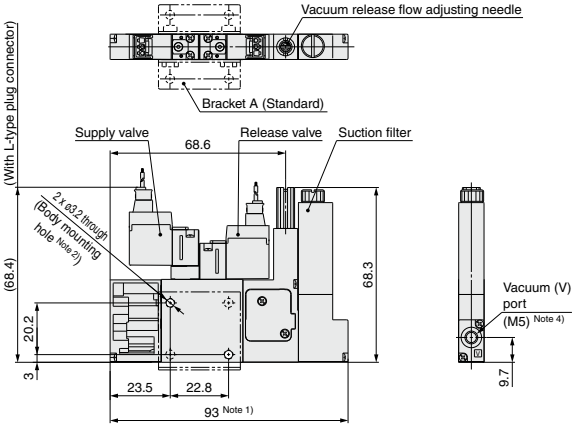

Circuit diagram

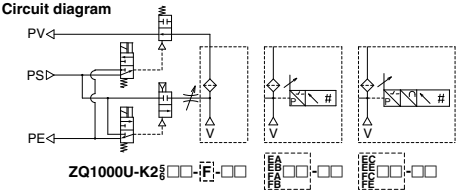

Note 1) The above dimensions are for ZQ1000U-J1□□□□-F-00.
In case of ZQ1000U-K1□□□-F□□□-00, the overall length is 113.3.
Note 2) The dimensions after bracket A is mounted are the same as those of the K1 type.
Note 3) When the body is mounted, tighten with a torque of 0.6 ± 0.06 N·m. Using excessive torque may cause damage to the body.
Note 4) The pitches of PS, PE, PV and V ports are determined assuming the use of One-touch fittings. If used with other fittings, these may cause interference, dependant on their type and size. Please refer to the catalog to confirm the sizes of the fittings to be used.

Type J2
ZQ1000U-J2□□□-□□□□-□□□

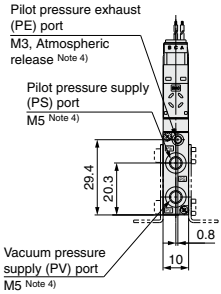

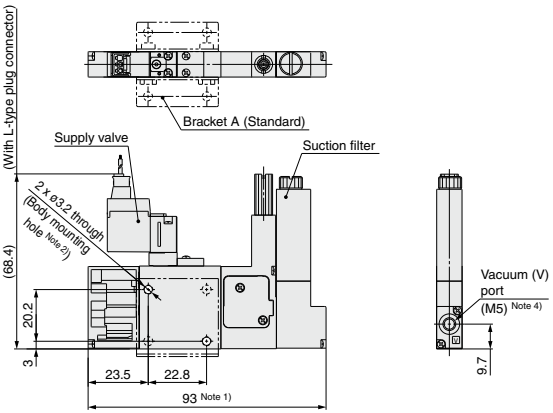

Circuit diagram

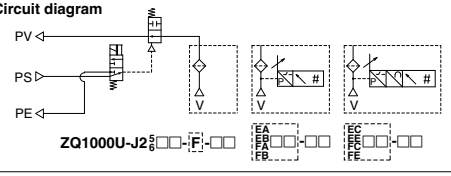

Note 1) The above dimensions are for ZQ1000U-J1□□□□-F-00.
In case of ZQ1000U-K1□□□-F□□□-00, the overall length is 113.3.
Note 2) The dimensions after bracket A is mounted are the same as those of the K1 type.
Note 3) When the body is mounted, tighten with a torque of 0.6 ± 0.06 N·m. Using excessive torque may cause damage to the body.
Note 4) The pitches of PS, PE, PV and V ports are determined assuming the use of One-touch fittings. If used with other fittings, these may cause interference, dependant on their type and size. Please refer to the catalog to confirm the sizes of the fittings to be used.
Note 5) In order to release a workpiece, design the circuit for vacuum release separately.

Dimensions

Type Q1, N1

ZQ1000U-Q1$^{5}_{6}$□-□□□□-□□
ZQ1000U-N1$^{5}_{6}$□-□□□□-□□

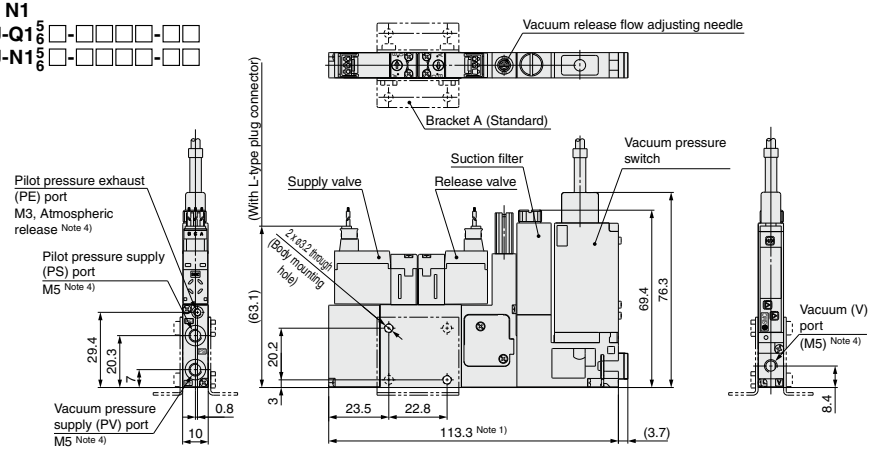

Circuit diagram

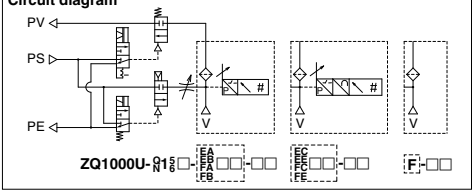

Note 1) The above dimensions are for ZQ1000U-Q1$^{5}_{6}$L-E□□G-00.
In case of ZQ1000U-N1$^{5}_{6}$□-F, the overall length is 93.
Note 2) The dimensions after bracket A is mounted are the same as those of the K1 type.
Note 3) When the body is mounted, tighten with a torque of 0.6 ± 0.06 N·m.
Using excessive torque may cause damage to the body.
Note 4) The pitches of PS, PV, V and PE ports are determined assuming the use of One-touch fittings. If used with other fittings, these may cause interference, dependant on their type and size. Please refer to the catalog to confirm the sizes of the fittings to be used.

Type Q2, N2

ZQ1000U-Q2□□-□□□□-□□
ZQ1000U-N2$^{5}_{6}$□-□□□□-□□

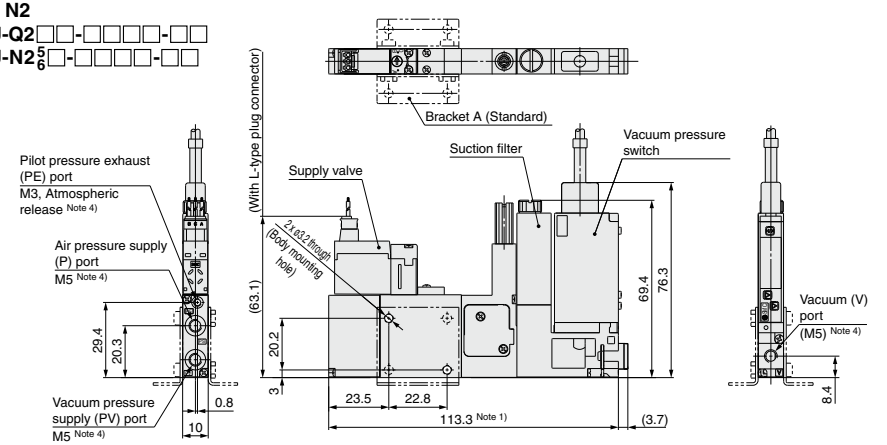

Circuit diagram

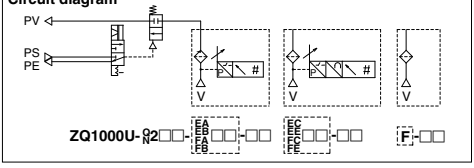

Note 1) The above dimensions are for ZQ1000U-Q2$^{5}_{6}$L-E□□G-00.
In case of ZQ1000U-N2□□-F-00, the overall length is 93.
Note 2) The dimensions after bracket A is mounted are the same as those of the K1 type.
Note 3) When the body is mounted, tighten with a torque of 0.6 ± 0.06 N·m.
Using excessive torque may cause damage to the body.
Note 4) The pitches of PS, PV, V and PE ports are determined assuming the use of One-touch fittings. If used with other fittings, these may cause interference, dependant on their type and size. Please refer to the catalog to confirm the sizes of the fittings to be used.
Note 5) In order to release a workpiece, design the circuit for vacuum release separately.

Dimensions

Manifold type (without PD port)

ZZQ1□□-□OB

∗ZQ1000M-□□□□□-□□□□-□

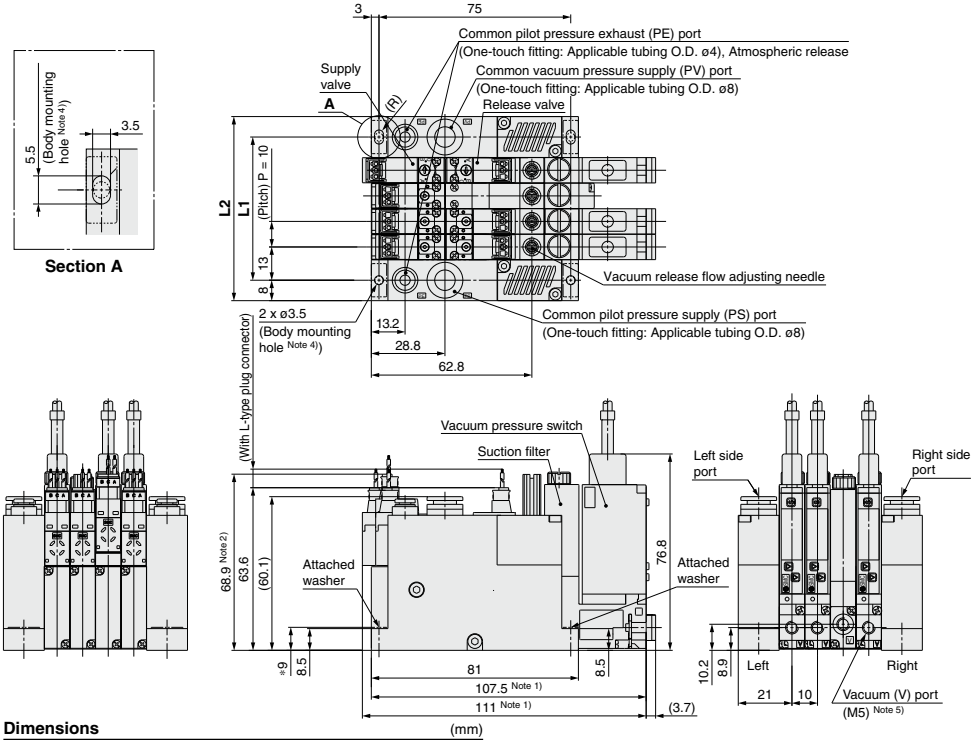

Dimensions (mm)

n	1	2	3	4	5	6	7	8
L1	26	36	46	56	66	76	86	96
L2	42	52	62	72	82	92	102	112

Note 1) The above dimensions are for ZZQ104-ROB.
- ∗ ZQ1000M-K1□$^{5}_{6}$L-E□□G-0.
- ∗ ZQ1000M-K2$^{5}_{6}$L-E□□G-0.
- ∗ ZQ1000M-J1□$^{5}_{6}$L-F-0.
- ∗ ZQ1000M-Q1$^{5}_{6}$L-E□□G-0.
- ∗ In case of ZQ1000M-$^{K}_{J}$□□□□□-F-0, the overall length is 87.2.
- ∗ In case of ZQ1000M-$^{Q}_{N}$□□□-F-0, the overall length is 90.7.
- ∗ In case of ZQ1000M-$^{K}_{J}$□□□□□-$^{E}_{F}$□□□-0, the overall length is 107.5.
- ∗ In case of ZQ1000M-$^{Q}_{N}$□□□-$^{E}_{F}$□□□-0, the overall length is 111.

Note 2) ∗ The above dimensions are for ZQ1000M-$^{K}_{J}$2$^{5}_{6}$□□-□□□□-□.
Note 3) Dimensions marked with "∗" are those after the attached washer is mounted.
Note 4) When the body is mounted, tighten with a torque of 0.6 ± 0.06 N·m. Using excessive torque may cause damage to the body.
Note 5) The pitches of V ports are determined assuming the use of One-touch fittings. If used with other fittings, these may cause interference, dependant on their type and size. Please refer to the catalog to confirm the sizes of the fittings to be used.
Note 6) When the release valve is not used, design the circuit for vacuum release separately in order to release a workpiece.

Circuit diagram

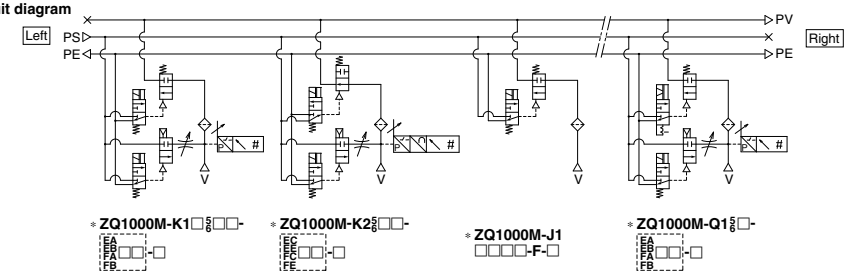

Dimensions

Manifold type (with PD port)

ZZQ1□□-□OC

∗ZQ1000M-□□□□□-□□□□-□

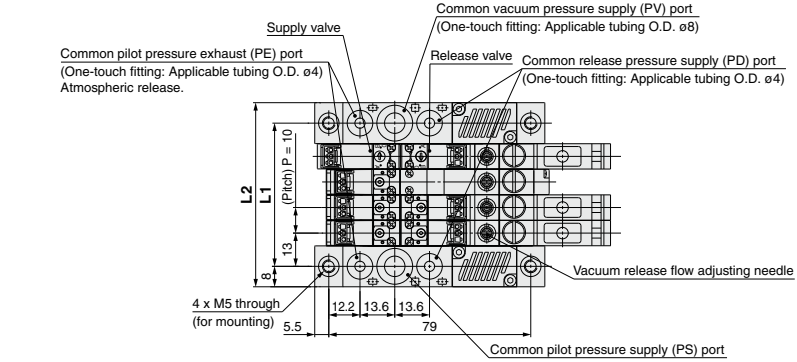

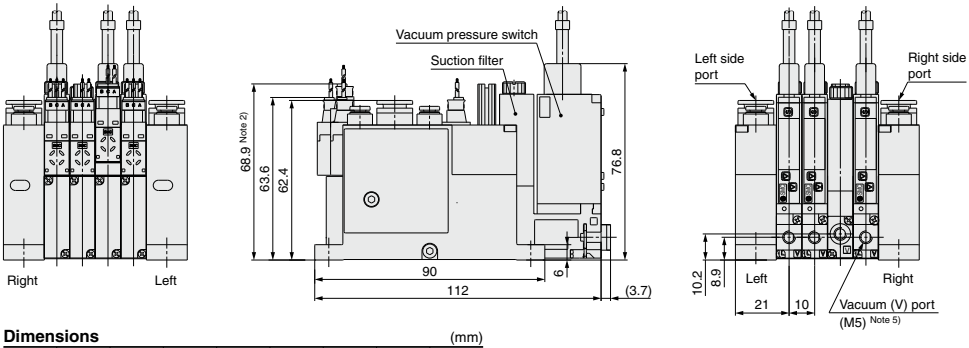

Dimensions (mm)

n	1	2	3	4	5	6	7	8
L1	26	36	46	56	66	76	86	96
L2	42	52	62	72	82	92	102	112

Note 1) The above dimensions are for ZZQ104-ROC.
- ∗ ZQ1000M-K1□$^{5}_{6}$L-E□G-0.
- ∗ ZQ1000M-K2$^{5}_{6}$L-E□G-0.
- ∗ ZQ1000M-J1□$^{5}_{6}$L-F-0.
- ∗ ZQ1000M-Q1$^{5}_{6}$L-E□G-0.
- ∗ In case of ZQ1000M-□□□□□-F-0, the overall length is 91.7.
- ∗ In case of ZQ1000M-□□□□□-E□G-0, the overall length is 112.

Note 2) ∗ The above dimensions are for ZQ1000M-$^{K}_{J}$2$^{5}_{6}$□□-□□□□-□.
Note 3) When the body is mounted, tighten with a torque of 0.6 ± 0.06 N·m. Using excessive torque may cause damage to the body.
Note 4) The pitches of V ports are determined assuming the use of One-touch fittings. If used with other fittings, these may cause interference, dependant on their type and size. Please refer to the catalog to confirm the sizes of the fittings to be used.
Note 5) When the vacuum release valve is not used, design the circuit for vacuum release separately in order to release a workpiece.

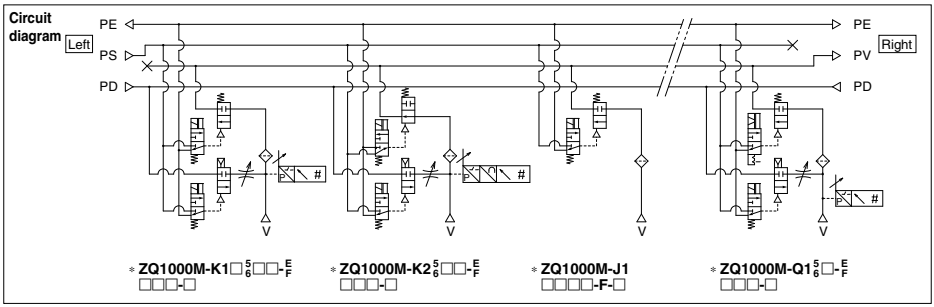

Dimensions

Fittings / Fitting type filter dimensions after installation

V port

<With vacuum pressure switch>

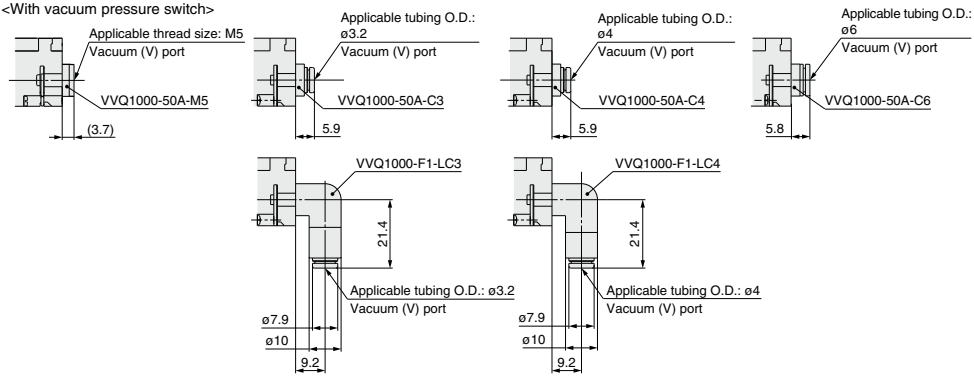

V port

<Suction filter only>

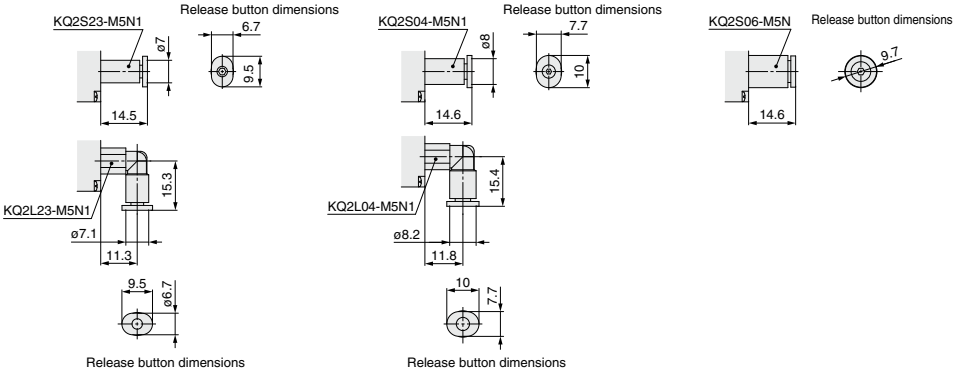

PS/PV port

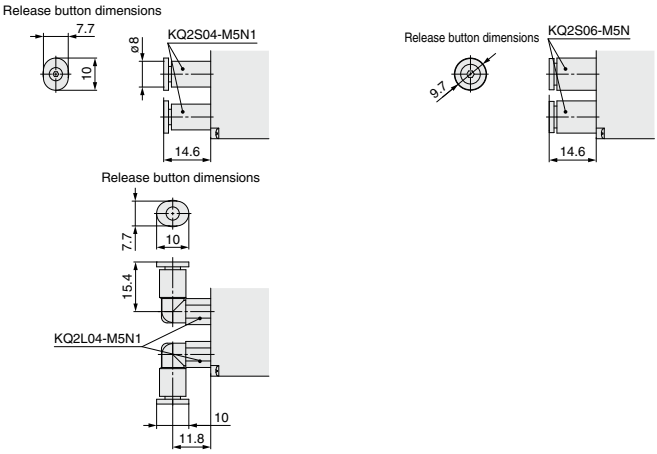

Manifold Exploded View

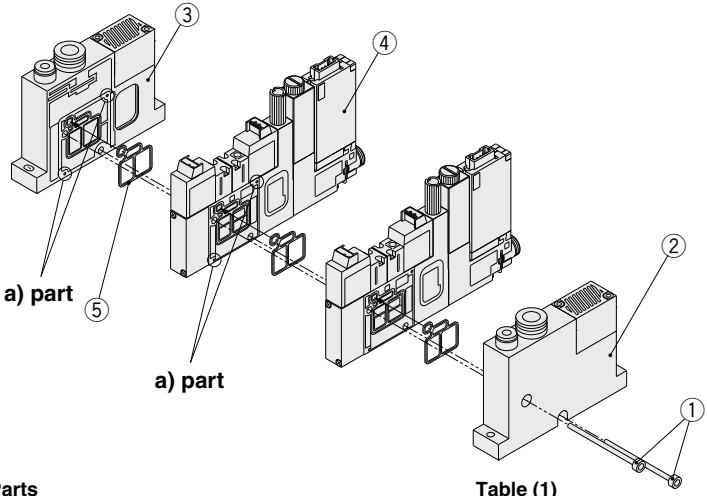

Component Parts

No.	Description	Part no.
1	**Hexagon socket head cap screw**	Refer to "How to Order" below.
2	**End block L**	Refer to "Table (1)".
3	**End block R**	Refer to "Table (2)" (including 1 pc. of ⑤).
4	**Vacuum pump system assembly**	ZQ1000M-□□□□□□-□□□□□-□ (-Q)[Note 1] (including 1 pc. of ⑤).
5	**Ejector body gasket for manifold**	ZQ-3-005-10AS [Note 2]

Note 1) Refer to pages 118 and 119 for detailed description of "How to Order".
Note 2) 10 pcs. are included in one set.

Table (1)

PV port location when the V port is viewed in front \ PD port specification	Without PD port	With PD port
Right side	ZQ1L-0-SOB	ZQ1L-0-SOC
Left side	ZQ1L-0-VOB	ZQ1L-0-VOC

Table (2)

PV port location when the V port is viewed in front \ PD port specification	Without PD port	With PD port
Right side	ZQ1R-0-V0B	ZQ1R-0-V0C
Left side	ZQ1R-0-S0B	ZQ1R-0-S0C

Working Procedure

Disassembly

Loosen and remove the clamp rod ①.

Assembly

1. Install the ejector body gasket for manifold ⑤ into the gasket groove of each vacuum pump system assembly ④.
2. Install the ejector body gasket for manifold ⑤ into the gasket groove of the end block R ②.
3. Align the ejector assemblies ④, end block (L) ②, and end block (R) ③ using positioning pins (at the two "a" positions) and fasten with clamp rods ① (2 pcs.) (with a tightening torque of 0.6 N·m ± 0.06 N·m).

How to Order Hexagon Socket Head Cap Screw

ZQ−STB 05

Number of stations

01	1 station
02	2 stations
⋮	⋮
08	8 stations

Note) 2 pcs. are included in one set.

Replacement of V Port Fittings (With vacuum pressure switch)

V port fittings are cassette style for easy replacement.
The fittings are blocked by a clip. Remove the clip with a flat blade screw-driver, etc. to replace the fittings.
When mounting the fittings, after inserting the fitting assembly until it stops, then put the clip into the prescribed position completely.

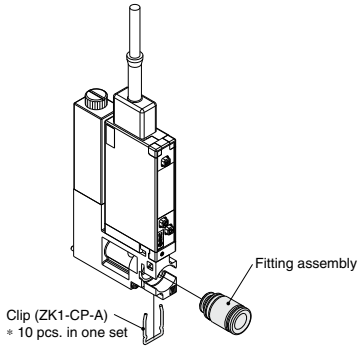

Applicable tubing O.D.	Straight	Elbow
Applicable tubing O.D. ø3.2	VVQ1000-50A-C3	VVQ1000-F1-LC3
Applicable tubing O.D. ø4	VVQ1000-50A-C4	VVQ1000-F1-LC4
Applicable tubing O.D. ø6	VVQ1000-50A-C6	—
M5 female thread	VVQ1000-50A-M5	—

ZQ Series
Specific Product Precautions 1

Be sure to read this before handling the products.
Refer to back page 50 for Safety Instructions and pages 49 to 51 for Vacuum Equipment Precautions.

Design and Selection

⚠Warning

1. Avoid energizing the solenoid valve for long periods of time.

If a solenoid valve is energized for a long period of time, the coil will get hot and the performance may be reduced. Additionally, the peripheral equipment in close proximity may also be badly affected. Use a low wattage solenoid valve when the solenoid valve is energized continuously or when the duration of the energization is longer than the non-energized period each day. Periods of energization can be shortened by using a normally opened or latching type solenoid valve. But, do not energize the coil on both A and B sides simultaneously when using the latching type.
Continuous energization of the solenoid valve should be less than 10 minutes in duration and the energization period should be shorter than the non-energized period. Take measures for any heat radiation so that the temperature is within the range of solenoid valve specifications when the solenoid valve is mounted on the control panel. Please pay special attention to any temperature increases when a manifold type with 3 stations or more is energized continuously or when three individual units are placed in close proximity.

2. Use the vacuum equipment within the operating supply pressure range.

When the operating with a lower supply pressure, the vacuum performance will be reduced and the poppet valve will cause malfunction.
Never use the vacuum equipment more than the operating supply pressure range as this may cause damage to the product resulting in potentially dangerous operation.

3. Suspension of operation for long periods of time

Please use caution — as detailed below — when the vacuum equipment is turned off for periods in excess of 6 hours.

- Be sure to turn off the pressure supply to the vacuum equipment.
  Please observe this precautions as the supply pressure will be applied for a extra period of time due to the line pressure increase and may result in damage to the vacuum equipment.
- Be sure to turn off the power supply to the solenoid valve and the pressure switch.
  Please observe this precautions as any heat generated due to the length of energization time may seriously affect the vacuum equipment and peripheral equipment resulting in potentially dangerous operation.

4. Check valve

The check valve has a function to prevent the exhaust air from the silencer overflowing to the vacuum port side when a manifold is used. However, depending on usage conditions, it does not always suppress air overflow to the desired extent. During usage, please inspect thoroughly with actual machine. Also, no guarantee is therefore provided when used for any other purposes. It is especially dangerous if used for the purpose of workpiece drop prevention in the case of operator blackout. Therefore, please take additional measures for providing drop prevention, such as providing a guide.

5. Exhaust port (EXH port) on the vacuum ejector

Please check the exhaust port (EXH port) on the vacuum ejector, so that any exhaust resistance will not be increased due to insulating materials or restrictions in the piping. The exhaust resistance may reduce the ejector's performance. Additionally, never use this product in an application where the exhaust port is blocked when detaching a workpiece. This misuse may result in possible damage to the product.

⚠Warning

6. Vacuum release flow adjustment needle

Adjust the vacuum release flow adjustment needle from the fully closed to the open state by 1/8 to 1/4 turns to detach a workpiece completely during the ON time of a release valve.
Do not supply compressed air while the vacuum release flow adjustment needle is adjusted. Securely lock it with a lock nut after adjustment.

7. How to use the latching type solenoid valve

Our Latching type solenoid are fitted with a self-detaining mechanism. Its construction features an armature inside the solenoid which is set or reset using spontaneous energization. (20 ms or greater) Therefore, continuous energization is not required.

How to Use the Latching Type Plug Connector

Wiring specifications

● Wiring should be connected as shown below. Connect with the power supply respectively.

DC positive common

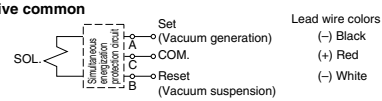

DC negative common

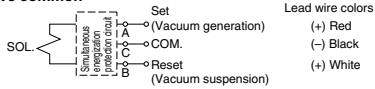

AC type

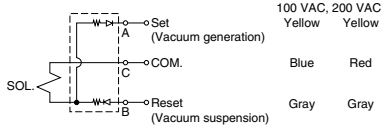

Special care must be taken for the latching type.

1. Avoid using this product with a circuit which electrifies both the set and reset signals simultaneously.
2. The minimum energization time required for self-detaining is 20 ms.
3. Please contact us when using this product in locations where there are vibration levels of 30 m/s² or above or highly magnetic fields. No problems arise in normal usage or locations.
4. This valve retains the reset position (Flow path: A → R) at the time of shipment. However, it may alter to the set position during transporatation or due to vibration when mounting the valve. Therefore, confirm the home position either manually or with power supply prior to use.

Mounting

⚠Warning

1. Screw tightening torque for mounting the body should be performed with 0.6 ± 0.06 N•m.

Excessive torque may damage the product.

ZQ Series
Specific Product Precautions 2

Be sure to read this before handling the products.
Refer to back page 50 for Safety Instructions and pages 49 to 51 for Vacuum Equipment Precautions.

Vacuum Switch

⚠Warning

1. The following diagram shows the internal circuits of the vacuum switch as well as wiring examples. Incorrect wiring could cause malfunction or failure, leading to an electric shock or fire.

Internal Circuits and Wiring Examples

EA, FA
NPN open collector (2 outputs)

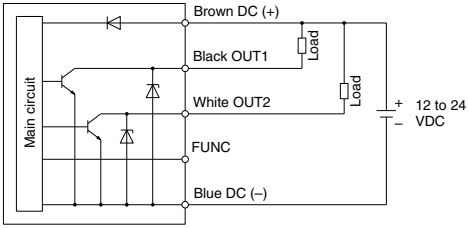

EB, FB
PNP open collector (2 outputs)

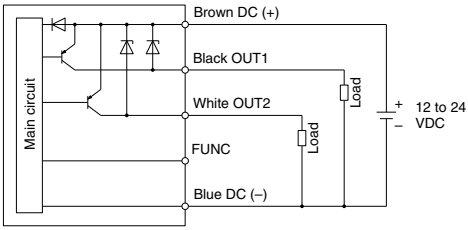

EC, FC
NPN open collector (1 output) + Analog voltage output

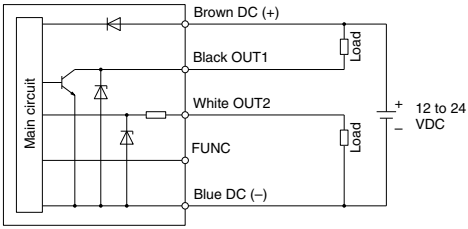

EE, FE
PNP open collector (1 output) + Analog voltage output

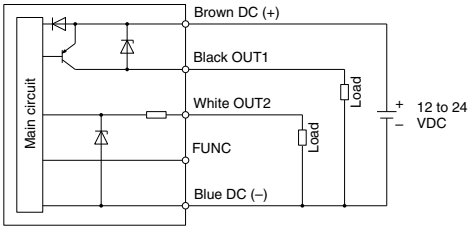

∗ The FUNC terminal is connected when using the copy function. (Refer to the operation manual of the ZSE10 series.)